FlexiVent 1050200/75x8

Supply or exhaust ventilation systems of residential spaces. For distribution of air from the ventilation unit through the air ducts

• Casing material: Polypropylene

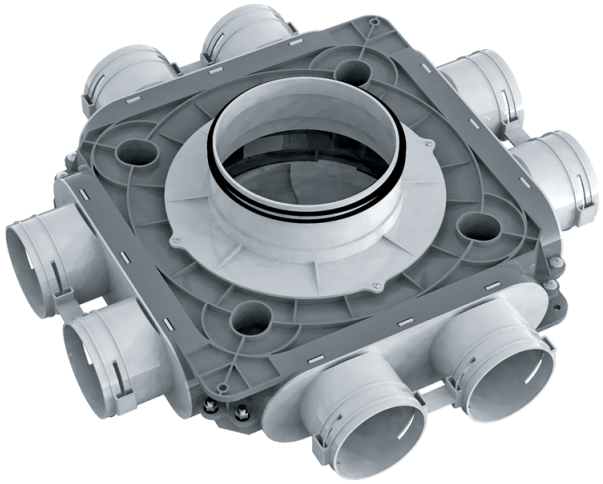

	Unit of measurement	FlexiVent 1050200/75x8
Connected air duct size	mm	75
Ambient air temperature max	°C	60
Ambient air temperature min	°C	-20

Dimensions

Ø d	H	L
188	140	468

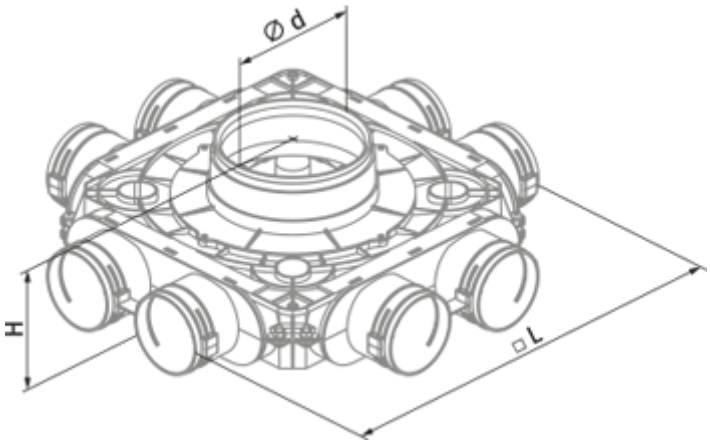
Ø d
H
□ L