FlexiVent 1050125/75x3

Supply or exhaust ventilation systems of residential spaces. For distribution of air from the ventilation unit through the air ducts

• Casing material: Polypropylene



	Unit of measurement	FlexiVent 1050125/75x3
Connected air duct size	mm	75
Ambient air temperature max	°C	60
Ambient air temperature min	°C	-20

Dimensions

Ø D	Ø d	W
125	75	276

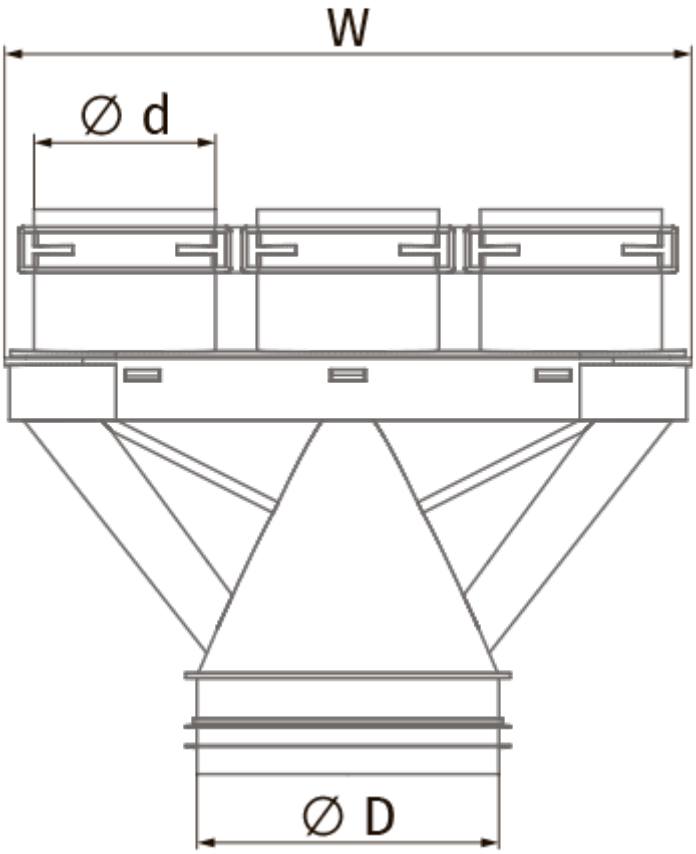
W
Ø d
Ø D