FlexiVent 1002125/90x6

Supply or exhaust ventilation systems of residential spaces. For distribution of air from the ventilation unit through the air ducts

• Casing material: Aluzinc



	Unit of measurement	FlexiVent 1002125/90x6
Connected air duct size	mm	90

Dimensions

Ø D	H	L	W
122	239	348	432

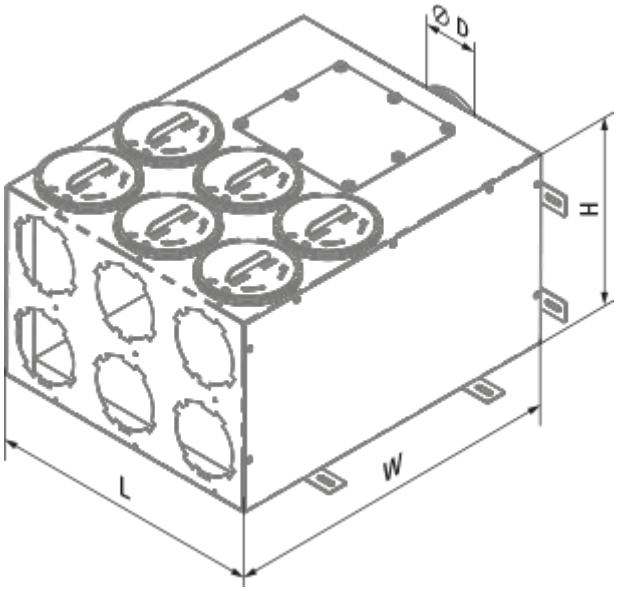
Ø D
H
L
W