FlexiVent 0832200x55/63x2

For supply and exhaust systems in residential premises. Connecting the ventilation grille to ∅ 63 mm ducts

• Casing material: Metal

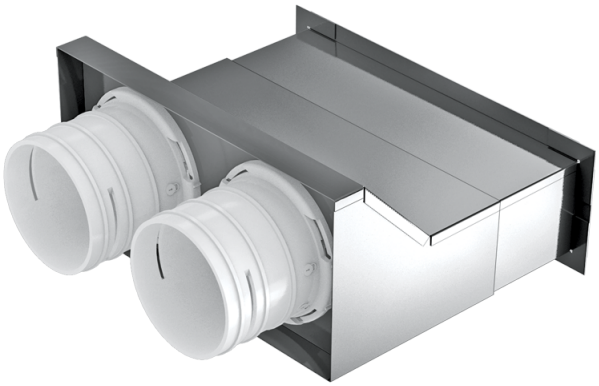

	Unit of measurement	FlexiVent 0832200x55/63x2
Connected air duct size	mm	63

Dimensions

∅ D	H	H1	L	W
72	112	75	204	177

