# FlexiVent 0821300x100/90x2

For supply and exhaust systems in residential premises. Connecting the ventilation grille to ∅ 90 mm ducts

• Casing material: Metal



| | Unit of measurement | FlexiVent 0821300x100/90x2 |
|---|---|---|
| Connected air duct size | mm | 90 |

## Dimensions

| H | L | W | W1 |
|---|---|---|---|
| 300 | 401 | 115 | 181 |

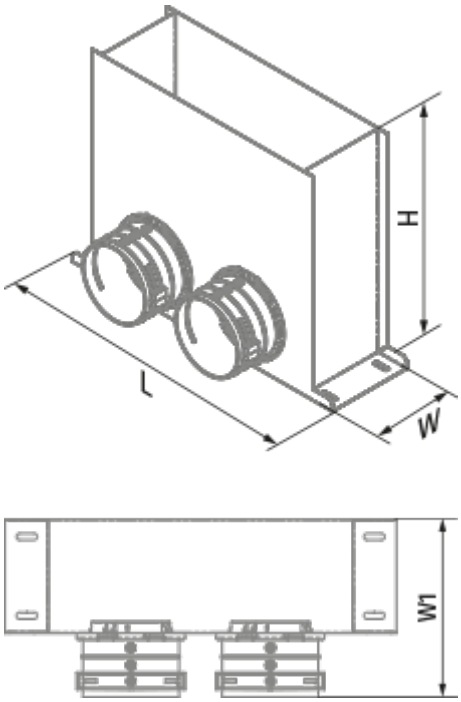
H
L
W
W1