FlexiVent 0810125/52x2

For supply and exhaust systems in residential premises. Connecting the ventilation grille to ∅ 52 mm ducts

• Casing material: Polypropylene



	Unit of measurement	FlexiVent 0810125/52x2
Connected air duct size	mm	52
Ambient air temperature max	°C	60
Ambient air temperature min	°C	-20

Dimensions

∅ d	H	L	W
127	163	240	320

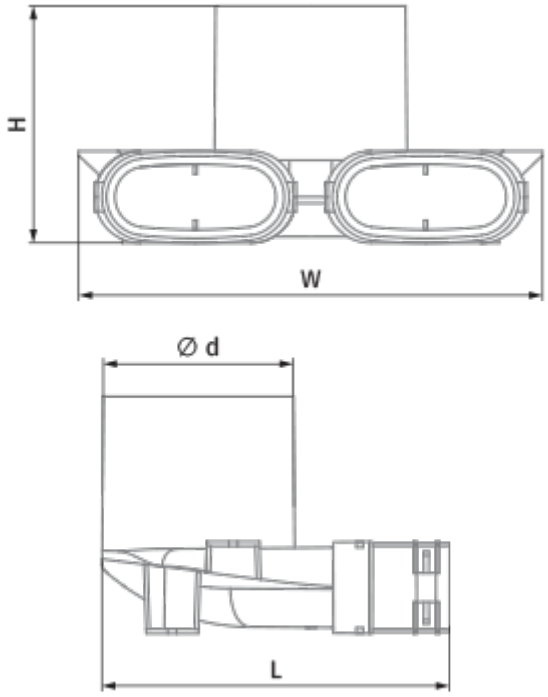
H
W
Ø d
L