FlexiVent 01905000

Round duct

- Casing material: HDPE



	Unit of measurement	FlexiVent 01905000
Connected air duct size	mm	90
Ambient air temperature min	°C	-20
Ambient air temperature max	°C	60

Dimensions

D	D1	L
90	77	50000

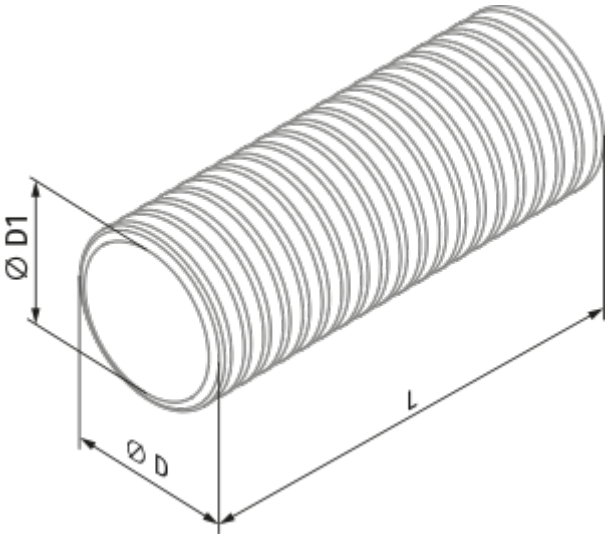
Ø D1
Ø D
L