# FL5-T 100 LED5 6K



Supply and exhaust plastic diffusers

• Casing material: Plastic

| | Unit of measurement | FL5-T 100 LED5 6K |
|---|---|---|
| Minimum supply voltage | V | 220 |
| Maximum supply voltage | V | 240 |
| Power supply frequency | Hz | 50 |
| Rated power | W | 5 |
| Ingress protection rating | - | IPX4 |

## Dimensions

| D | D1 | L | L1 |
|---|---|---|---|
| 173 | 97 | 60 | 17.6 |

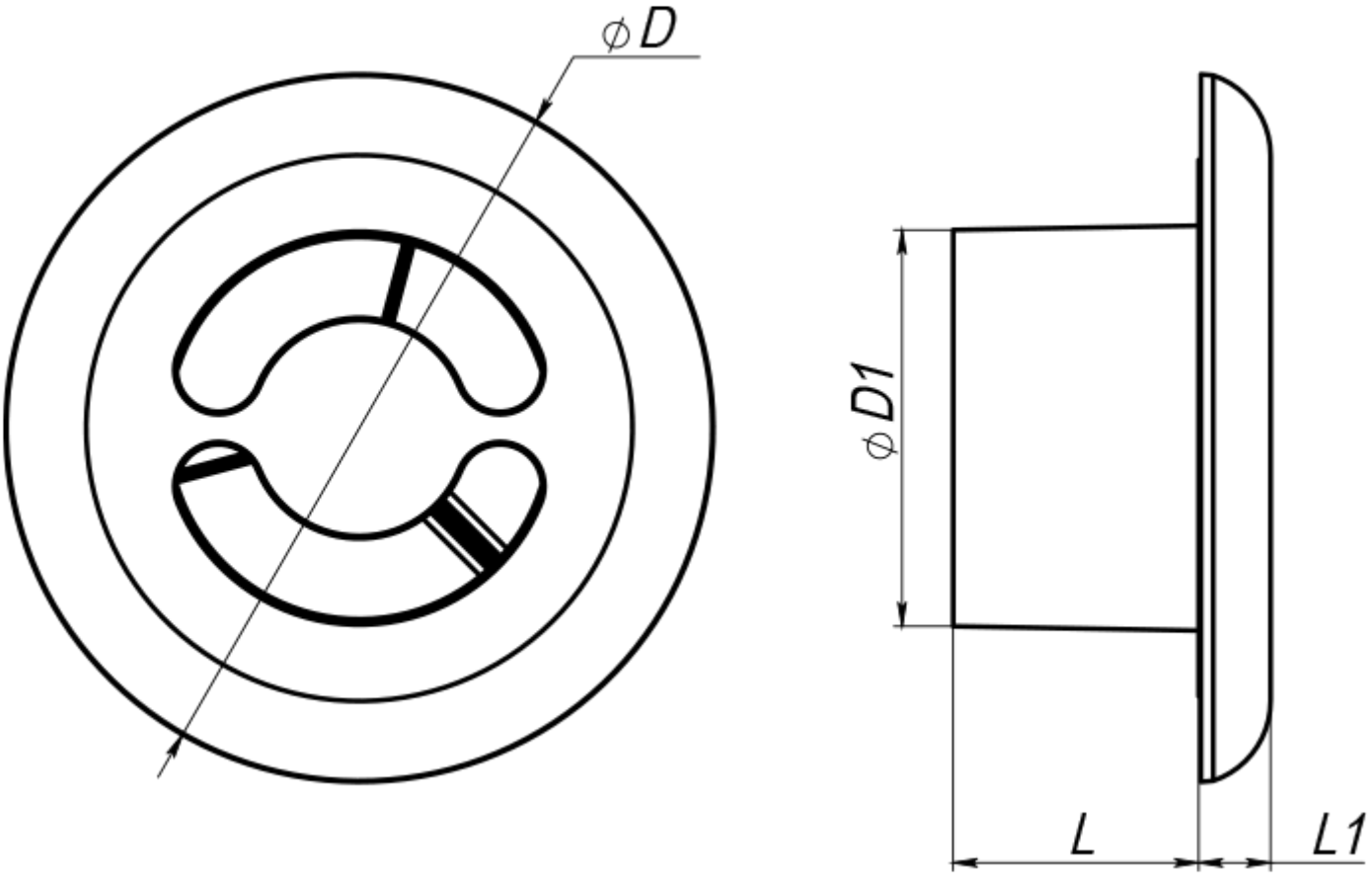
ϕD
ϕD1
L
L1