FL5-T 100 LED5 6K Chrome

Supply and exhaust plastic diffusers

• Casing material: Plastic

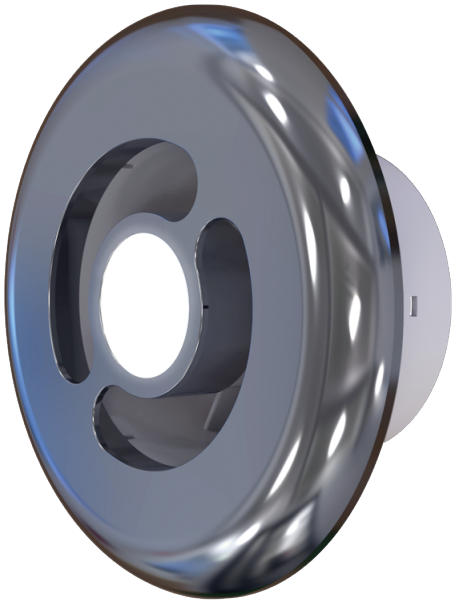

	Unit of measurement	FL5-T 100 LED5 6K Chrome
Minimum supply voltage	V	220
Maximum supply voltage	V	240
Power supply frequency	Hz	50
Rated power	W	5
Ingress protection rating	-	IPX4

Dimensions

D	D1	L	L1
173	97	60	17.6

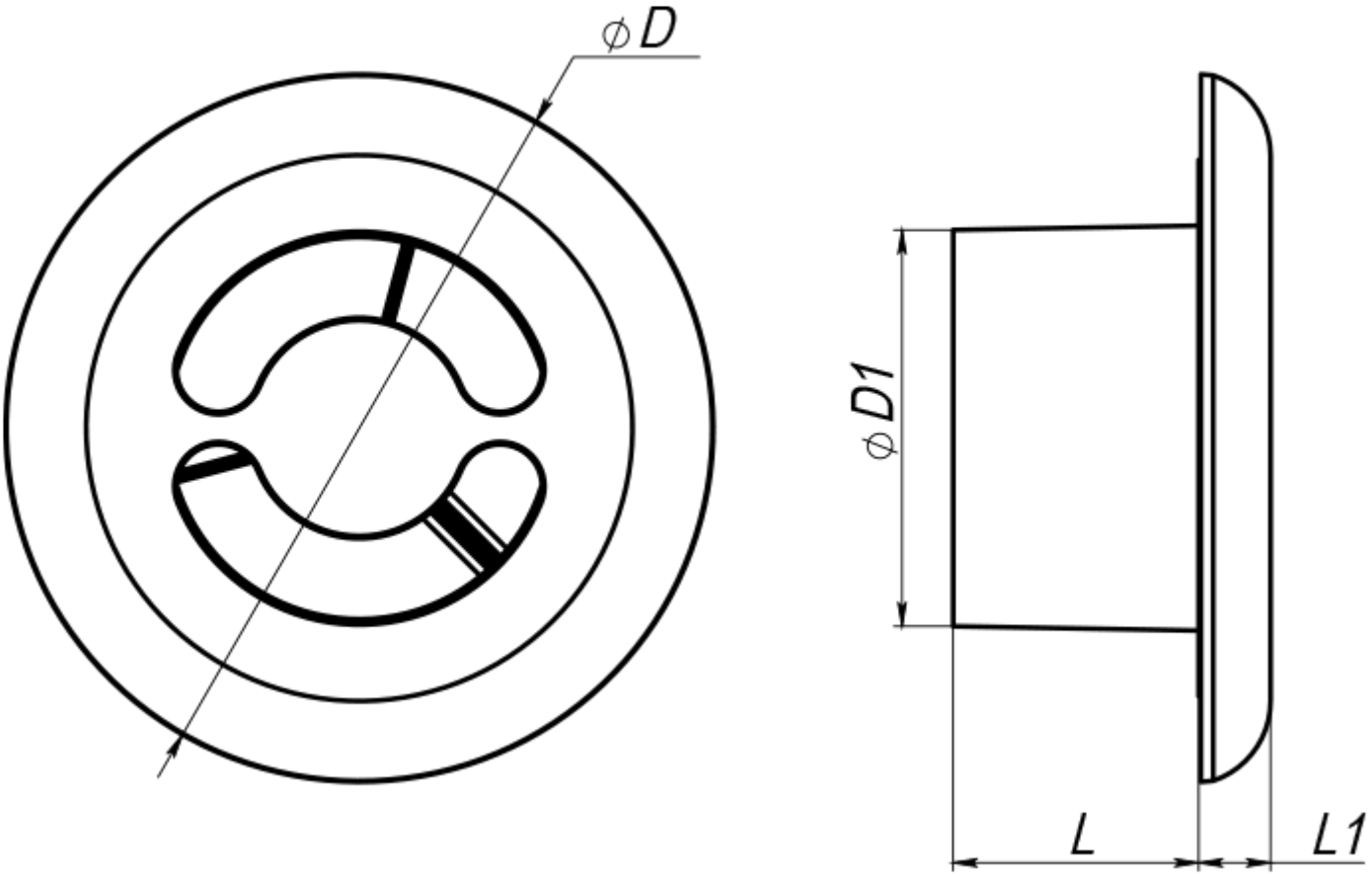
ϕD
ϕD1
L
L1