FL5 100 white matt

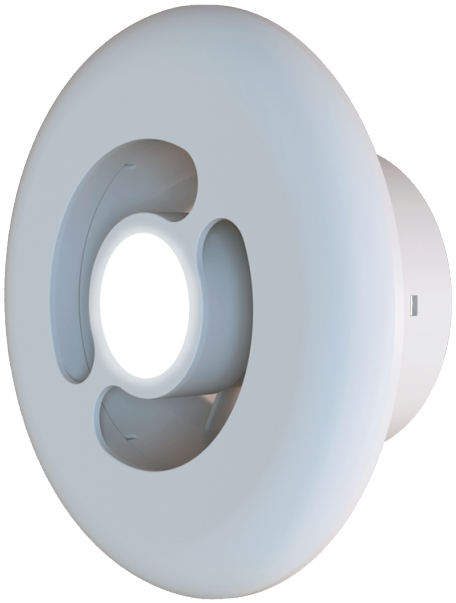

Supply and exhaust plastic diffusers

• Casing material: Plastic

	Unit of measurement	FL5 100 white matt
Ingress protection rating	-	IPX4

Dimensions

D	D1	L	L1
173	97	60	17.6

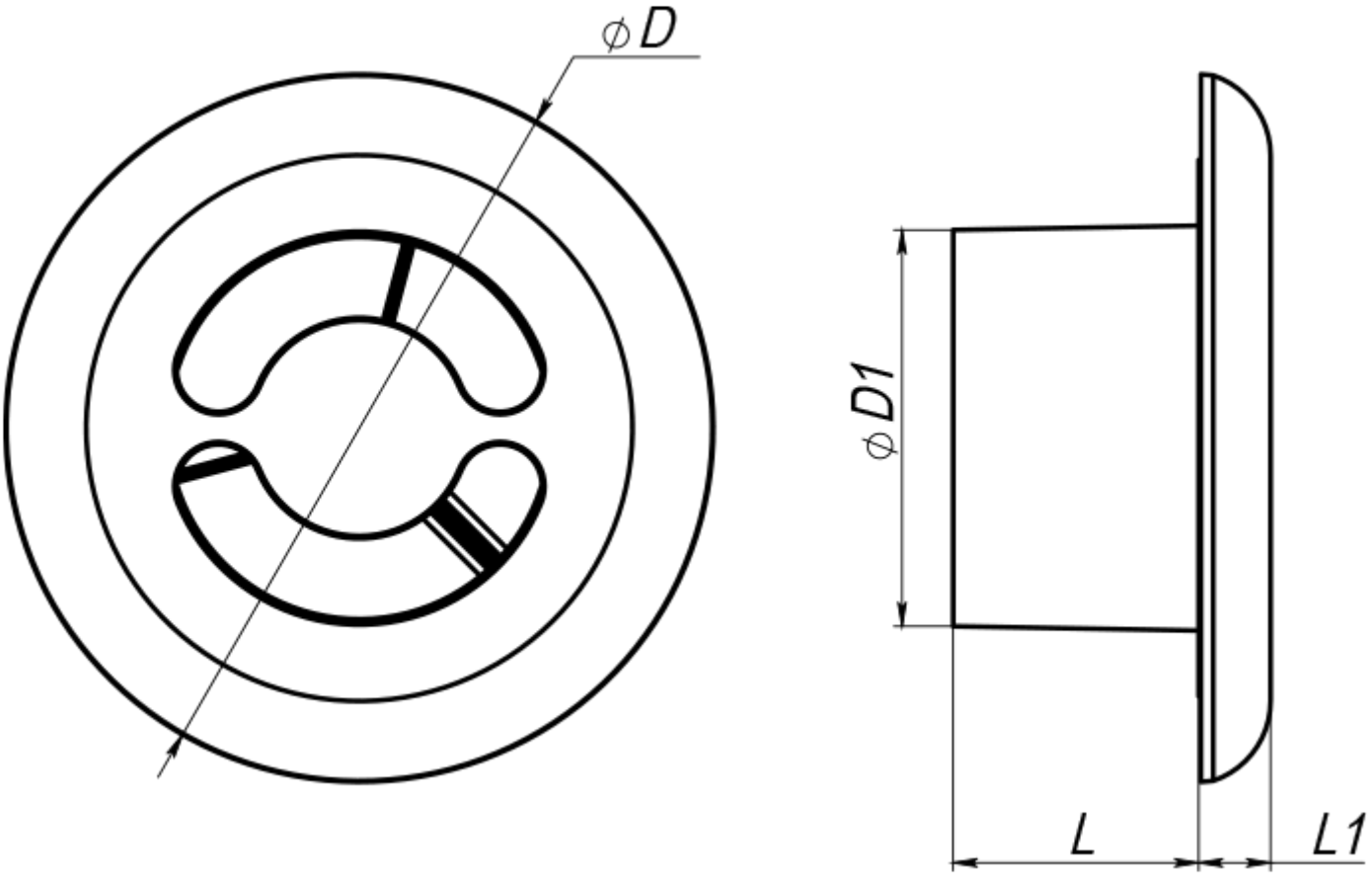
ϕD
ϕD1
L
L1