FB 700x400



Rectangular panel air filters

- Filter: G4
- Casing material: Galvanized steel

	Unit of measurement	FB 700x400
Weight	kg	6.7
Filter	-	G4

Dimensions

B	B1	B2	H	H1	H2
700	720	740	400	420	440

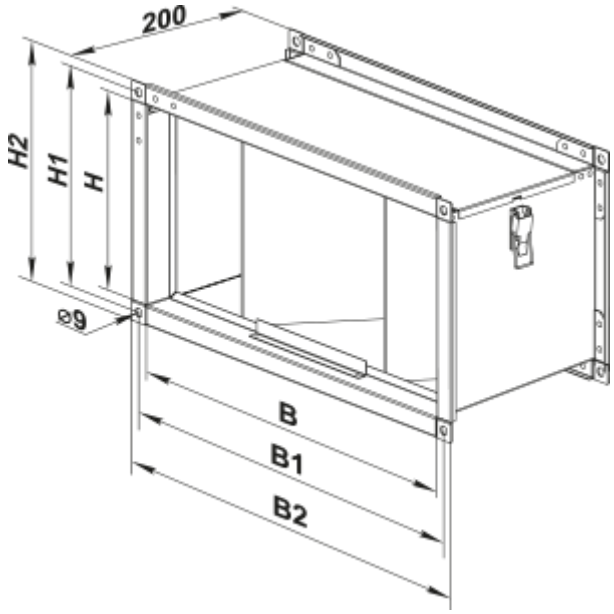
200
H2
H1
H
ø9
B
B1
B2