FB 500x250



Rectangular panel air filters

- Filter: G4
- Casing material: Galvanized steel

	Unit of measurement	FB 500x250
Weight	kg	4.1
Filter	-	G4

Dimensions

B	B1	B2	H	H1	H2
500	520	540	250	270	290

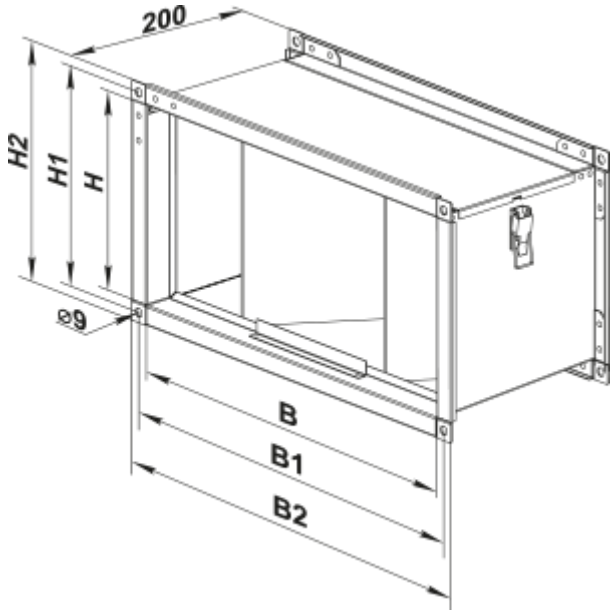
200
H2
H1
H
ø9
B
B1
B2