Fantom-A



Centrifugal extract fans for high-resistance air ducts

• Sound pressure level LpA at 3 m: 21
• Impeller type: Centrifugal impeller with forward curved blades
• Casing material: Plastic
• Backdraft protection: Backdraft damper

	Unit of measurement	Fantom-A	
Speed	-	1	2
Maximum supply voltage	V	240	
Minimum supply voltage	V	220	
Power supply frequency	Hz	50	
Rated power	W	11	20
Unit current	A	0.068	0.089
Maximum airflow	m^3/h	35	60
Sound pressure level LpA at 3 m	dB(A)	15	21
Ambient air temperature max	°C	40	
Ambient air temperature min	°C	1	
Ingress protection rating	-	IP45	
Impeller material	-	Plastic	

Dimensions

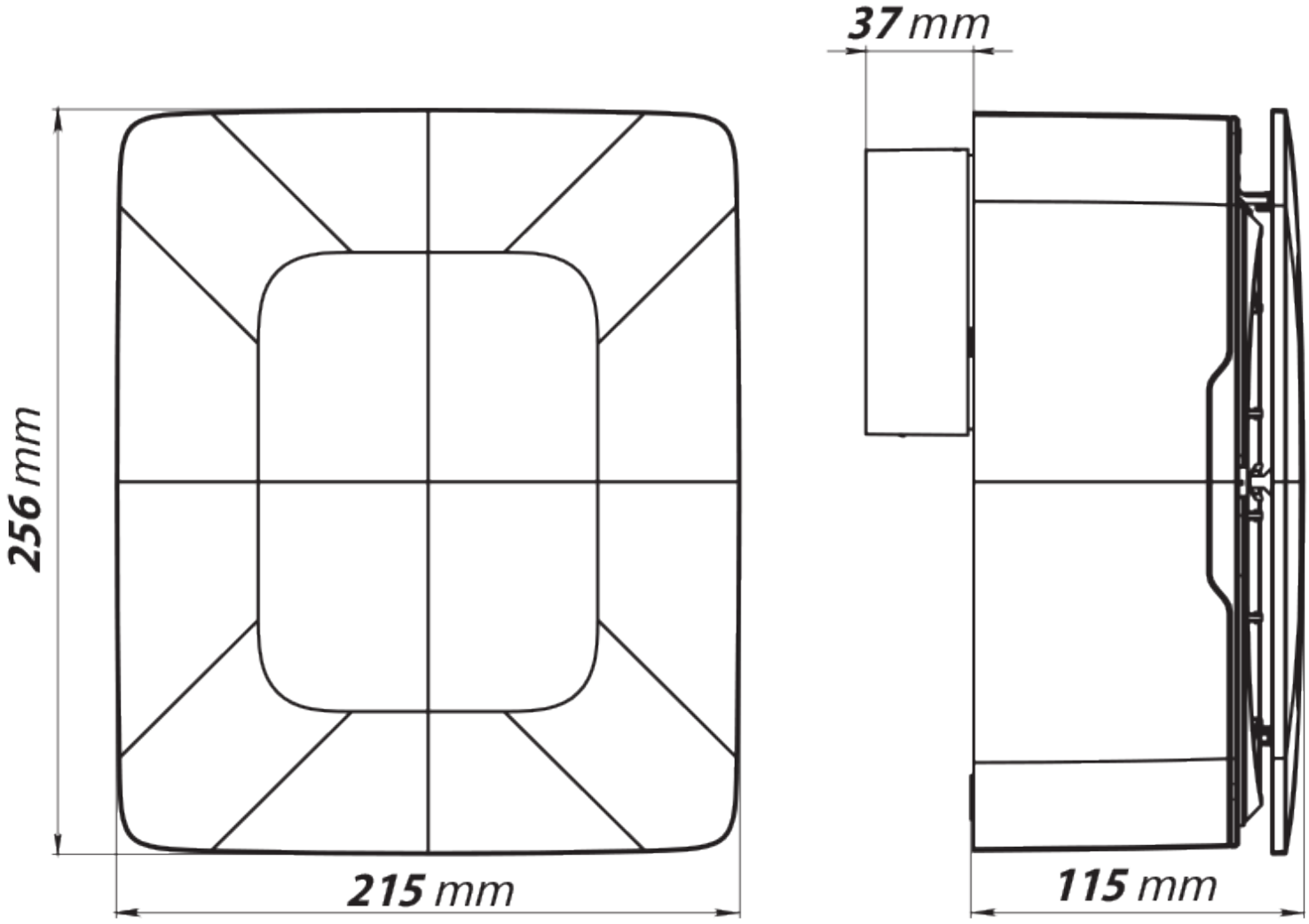

Accessories

Fittings

Name	Photo	Description

PVT 050/10		The adhesive PVC tape is an insulation tape made of plasticized PVC base covered with a glue layer
PVT 050/30		The adhesive PVC tape is an insulation tape made of plasticized PVC base covered with a glue layer
PVT 050/50		The adhesive PVC tape is an insulation tape made of plasticized PVC base covered with a glue layer

Flexible ducts

Name	Photo	Description
Polyvent N		Flexible uninsulated air duct made of metallized film

Window vents

Name	Photo	Description
PO 400		Window ventilators for supply ventilation

Ecodesign

Trademark	Vents					
Model	Fantom-A					
Specific energy consumption (SEC) (kWh/(m²/a))	Cold		Average		Warm	
	69.2	G	85.6	G	95	G
Type of ventilation unit	Unidirectional					
Type of heat recovery system	None					
Maximum flow rate (m³/h)	9					
Electric power input (W)	16.4					
Reference flow rate (m³/s)	0.001					
Reference pressure difference (Pa)	50					
Specific power input (SPI) (W/(m³/h))	3.281					
Control typology	Manual control					
Maximum external leakage rates (%)	2.7					
Sound power level (dB(A))	40					
The annual electricity consumption (AEC) (kWh/a)	Cold		Average		Warm	
	4110		4110		4110	
The annual heating saved (AHS) (kWh/a)	Cold		Average		Warm	
	3355		1715		776	