F4 125 FB



Ceiling diffuser

- Casing material: Plastic

	Unit of measurement	F4 125 FB
Connected air duct size	mm	125

Dimensions

D	B	L
124	165	88

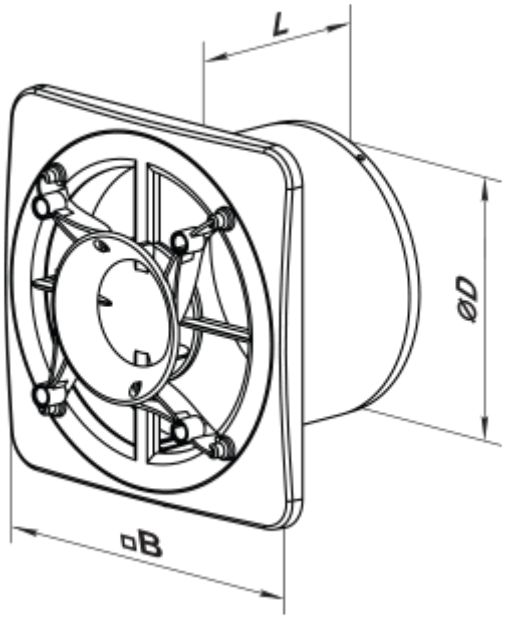

Accessories

Decorative panels

Name	Photo	Description
FP 180 Plain		Removable decorative front panels are a universal solution allowing to choose the design of a fan or ventilation grille for any interior of a bathroom or kitchen.
FP 180 Plain red		Removable decorative front panels are a universal solution allowing to choose the design of a fan or ventilation grille for any interior of a bathroom or kitchen.
FP 180 Plain black sapphire		Removable decorative front panels are a universal solution allowing to choose the design of a fan or ventilation grille for any interior of a bathroom or kitchen.
FP 180 Plain metallic		Removable decorative front panels are a universal solution allowing to choose the design of a fan or ventilation grille for any interior of a bathroom or kitchen.
FP 180 Plain wing		Removable decorative front panels are a universal solution allowing to choose the design of a fan or ventilation grille for any interior of a bathroom or kitchen.
FPB 180/125 Disc		Removable decorative front panels are a universal solution allowing to choose the design of a fan or ventilation grille for any interior of a bathroom or kitchen.
FP 180 Aqua		Removable decorative front panels are a universal solution allowing to choose the design of a fan or ventilation grille for any interior of a bathroom or kitchen.
FP 180 Mars		Removable decorative front panels are a universal solution allowing to choose the design of a fan or ventilation grille for any interior of a bathroom or kitchen.

FP 180 Mystery		Removable decorative front panels are a universal solution allowing to choose the design of a fan or ventilation grille for any interior of a bathroom or kitchen.
FP 180 Plain chrome		Removable decorative front panels are a universal solution allowing to choose the design of a fan or ventilation grille for any interior of a bathroom or kitchen.
FP 180 Plain alumat		Removable decorative front panels are a universal solution allowing to choose the design of a fan or ventilation grille for any interior of a bathroom or kitchen.
FPB 180/125 Glass-1		Removable decorative front panels are a universal solution allowing to choose the design of a fan or ventilation grille for any interior of a bathroom or kitchen.
FPB 180/125 Glass-1 red		Removable decorative front panels are a universal solution allowing to choose the design of a fan or ventilation grille for any interior of a bathroom or kitchen.
FPB 180/125 Glass-1 black		Removable decorative front panels are a universal solution allowing to choose the design of a fan or ventilation grille for any interior of a bathroom or kitchen.