Enave-T 241 P A21

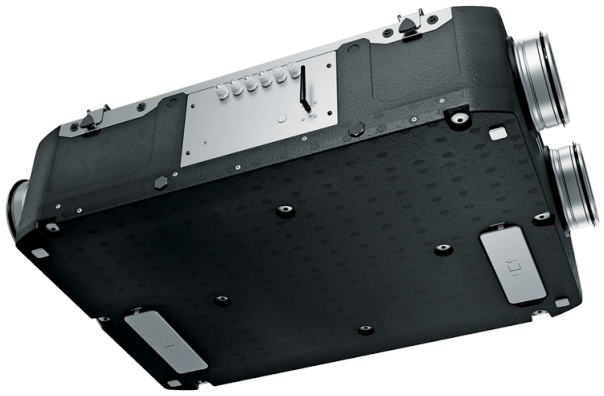

Suspended air handling units with a counterflow polystyrene or enthalpy heat exchanger

• Sound pressure level LpA at 3 m: 33
• Heat exchanger type: Counter flow
• Heat exchanger material: Enthalpy
• Supply filter: Coarse > 60 % (G4) (option ePM1 60 % (F7))
• Extract filter: Coarse > 60 % (G4)
• Sound-insulated casing
• Enthalpy heat exchanger
• Bypass: Auto
• Reheater: Optional
• Preheater: Optional
• BMS protocol: ModBus
• Control: Wired control panel, Wireless control panel, Smartphone
• Casing material: EPP
• Humidity sensor: Optional
• CO2 sensor: Optional
• PM2.5 sensor: Optional

	Unit of measurement	Enave-T 241 P A21
Connected air duct size	mm	160
Phases	-	1
Minimum supply voltage	V	230
Maximum supply voltage	V	230
Power supply frequency	Hz	50/60
Rated power	W	171
Unit current	A	1.34
Maximum airflow	m^3/h	310
Sound pressure level LpA at 3 m	dB(A)	33
Heat recovery efficiency, max	%	81
Heat exchanger type	-	Counter flow
Heat exchanger material	-	Enthalpy
Weight	kg	16
Supply filter	-	Coarse > 60 % (G4) (option ePM1 60 % (F7))
Extract filter	-	Coarse > 60 % (G4)
Transported air temperature (max)	°C	45
Ambient air temperature min	°C	1
Ambient air temperature max	°C	40
Ingress protection rating	-	IP22
Ambient air humidity max	%	60

Ingress protection rating of the drive	-	IP44

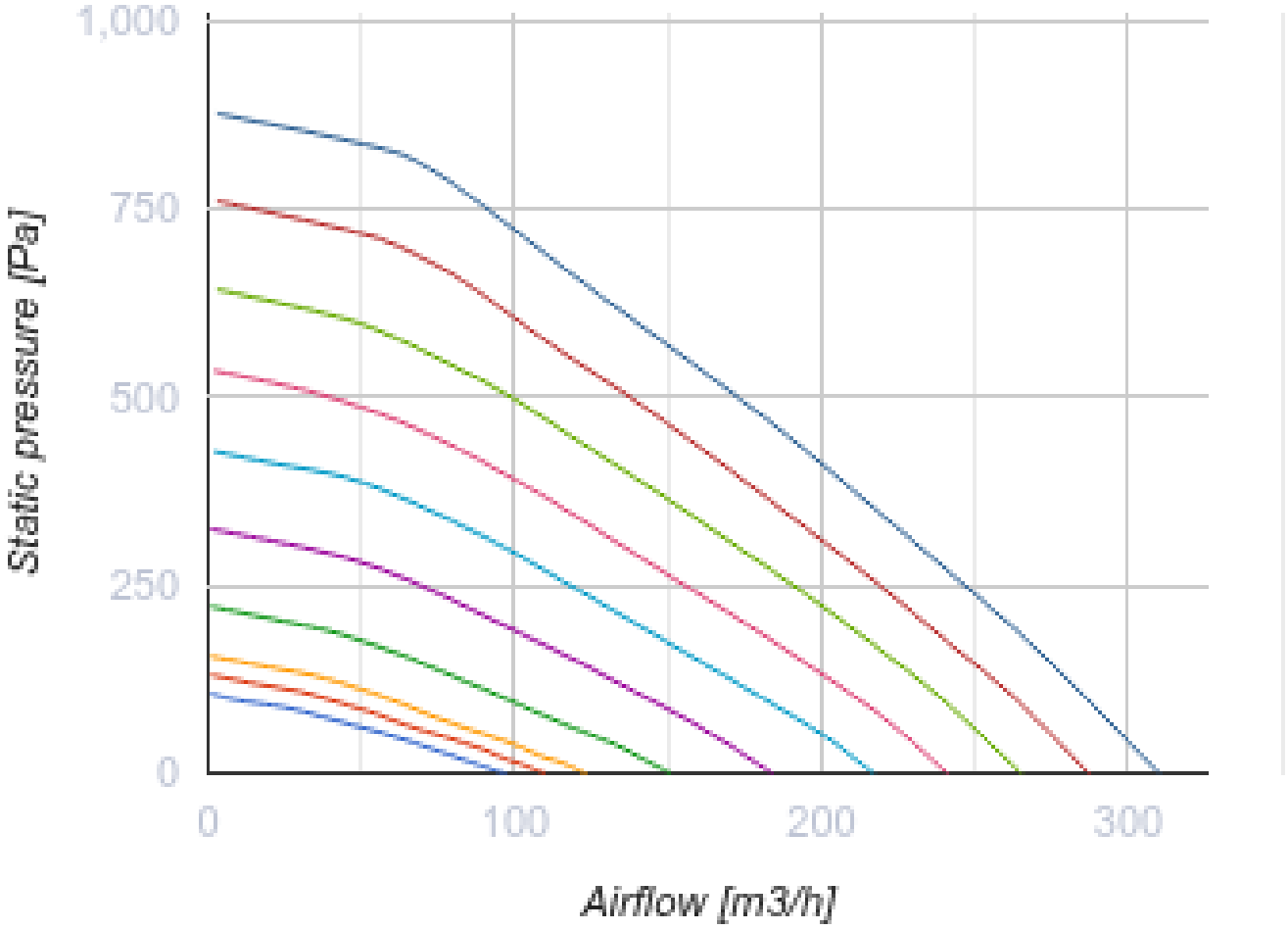

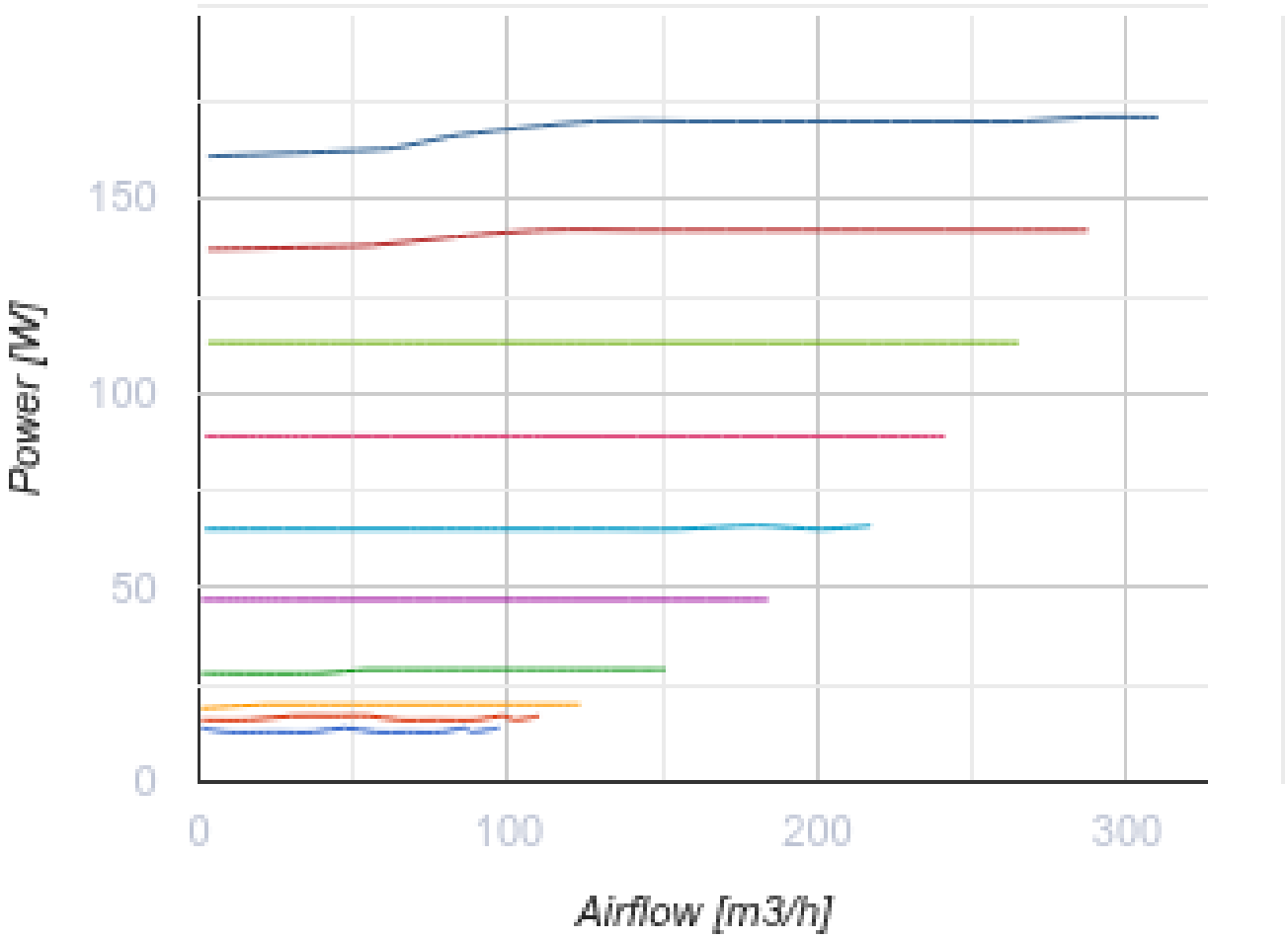

Dimensions

H	W	L	D	W1	L1
272	640	930	160	300	617

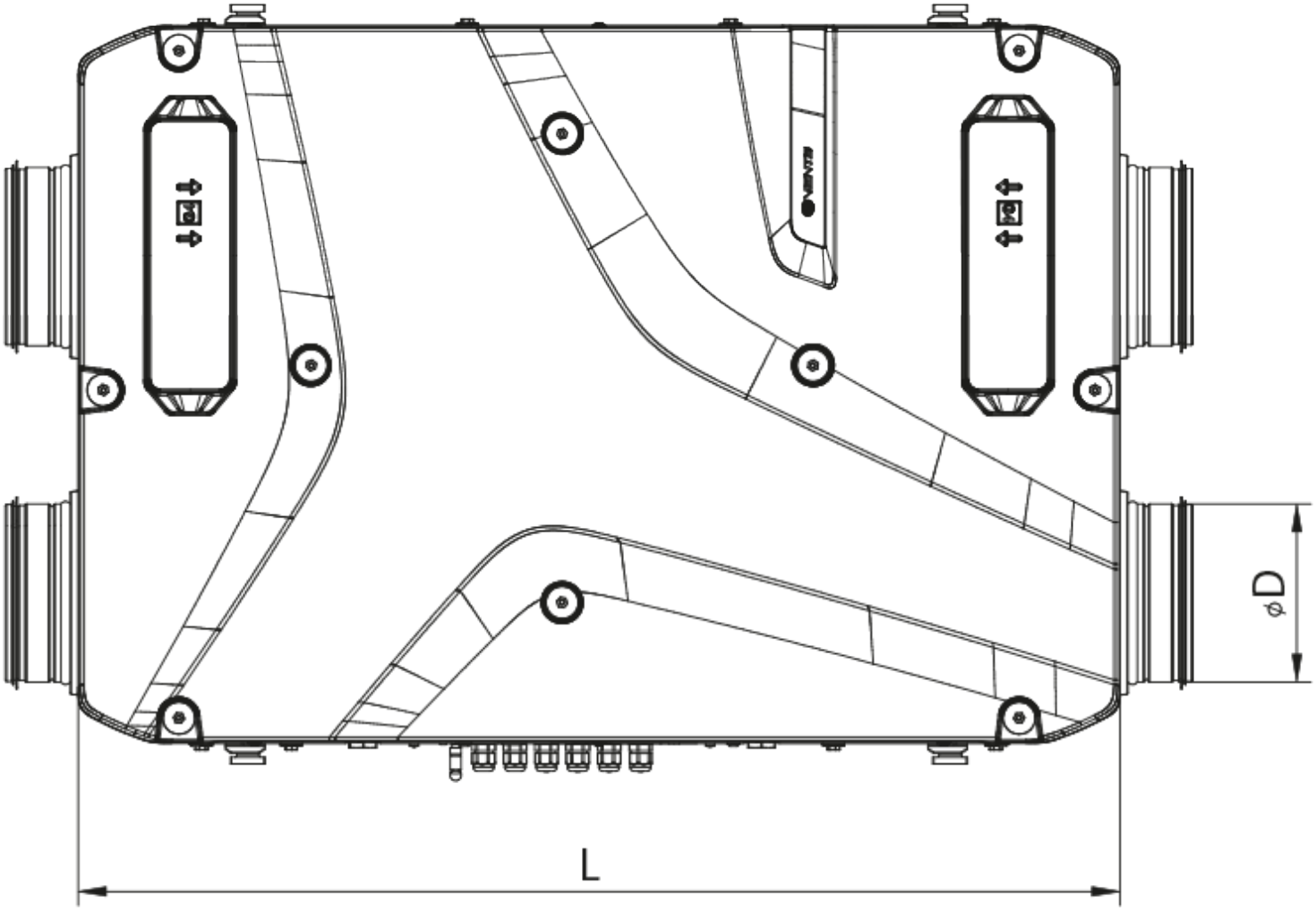
ϕD
L

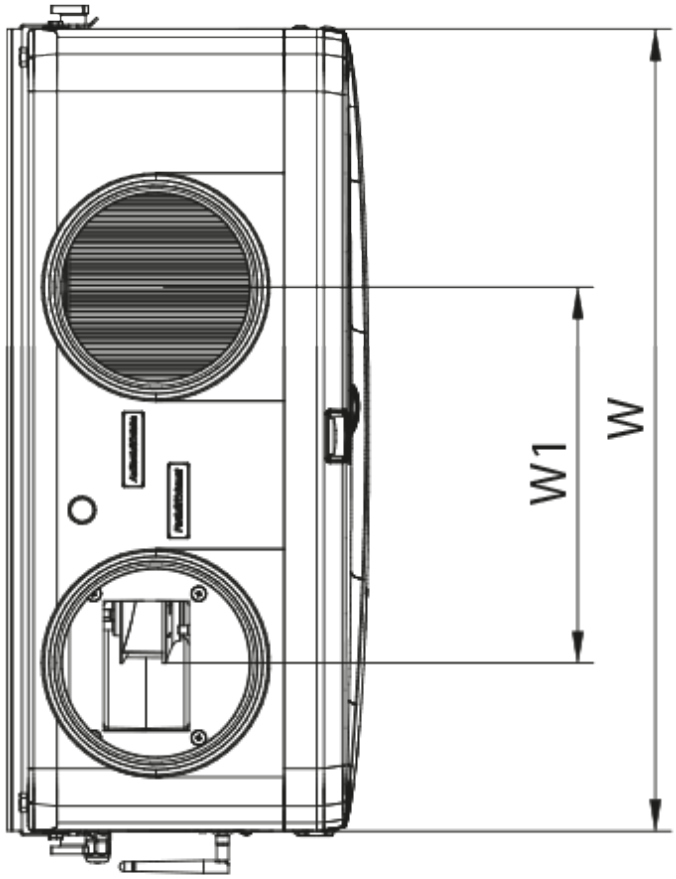
W1
W

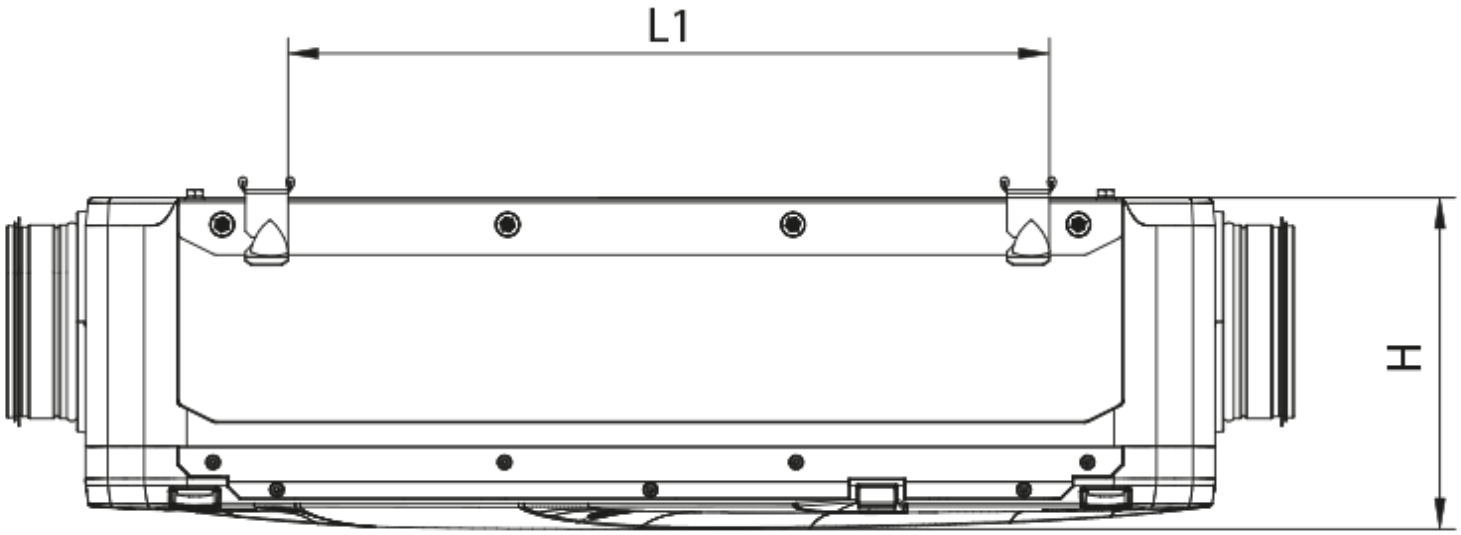

Accessories

Control Panels for AHU

Name	Photo	Description

A25		Touch screen control panel for controlling industrial and residential air handling units
A22		Control panels for controlling industrial and residential air handling units
A22 WiFi		Control panels for controlling industrial and residential air handling units

Sensors

Name	Photo	Description
HV2		Humidity sensor
CO2-1		CO2 sensors
CO2-2		CO2 sensors
HR-S		Electro-mechanical humidistat
CO2-3		CO2 sensor

Electrical heaters

Name	Photo	Description
NKP 160-0,8-1 A21 V.2		Inline heaters for heat exchanger frost protection
NKP 160-1,2-1 A21 V.2		Inline heaters for heat exchanger frost protection
NKP 160-1,7-1 A21 V.2		Inline heaters for heat exchanger frost protection
NKP 160-2,0-1 A21 V.2		Inline heaters for heat exchanger frost protection
NKD 160-0,8-1 A21 V.2		Inline supply air reheaters with external control

NKD 160-1,2-1 A21 V.2		Inline supply air reheaters with external control
NKD 160-1,7-1 A21 V.2		Inline supply air reheaters with external control
NKD 160-2,0-1 A21 V.2		Inline supply air reheaters with external control

Condensation drainage

Name	Photo	Description
SH-32		Hydraulic U-trap to drain condensate from heat exchangers and coolers

For round ducts

Name	Photo	Description
SR 160/600		Silencers made of galvanized steel filled with non-combustible sound-absorbing material
SR 160/900		Silencers made of galvanized steel filled with non-combustible sound-absorbing material
SR 160/1200		Silencers made of galvanized steel filled with non-combustible sound-absorbing material

For round ducts

Name	Photo	Description
KRV 160		Air dampers for automatic air flow control in round ducts

Electric actuators

Name	Photo	Description
Belimo TF230		The actuators are designed for controlling air dampers with cross section up to 0.4 m² performing protection functions

Other accessories

Name	Photo	Description

SF 205x200x48 Coarse 90% G4		Panel filter G4
SF 205x200x48 ePM1 60% F7		F7 panel filter

Cooker Hoods

Name	Photo	Description
PD-Enave 181 P		Decorative panel

Ecodesign

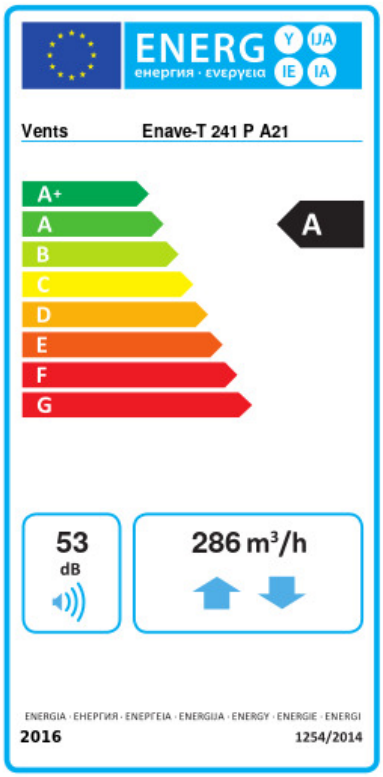

Trademark	Vents					
Model	Enave-T 241 P A21					
Specific energy consumption (SEC) (kWh/(m²/a))	Cold		Average		Warm	
	-73.2	A+	-37.9	A	-15	E
Type of ventilation unit	Bidirectional					
Type of drive installed	Variable speed					
Type of heat recovery system	Recuperative					
Thermal efficiency of heat recovery (%)	69					
Maximum flow rate (m³/h)	286					
Electric power input (W)	171					
Reference flow rate (m³/s)	0.056					
Reference pressure difference (Pa)	50					
Specific power input (SPI) (W/(m³/h))	0.323					
Control typology	Local demand control					
Maximum internal leakage rates (%)	2.7					
Maximum external leakage rates (%)	2.7					
Declared typology	RVU BVU					
Sound power level (dB(A))	53					
The annual electricity consumption (AEC) (kWh/a)	Cold		Average		Warm	
	753		216		171	
The annual heating saved (AHS) (kWh/a)	Cold		Average		Warm	
	8331		4258		1926	