Enave 550 V A14 R



Vertical air handling units with a counterflow polystyrene or enthalpy heat exchanger

- Sound pressure level LpA at 3 m: 38
- Heat exchanger type: Counter flow
- Heat exchanger material: Polystyrene
- Supply filter: G4 / Coarse > 60% (option F7 / ePM1 60%)
- Extract filter: G4 / Coarse > 60%
- Sound-insulated casing
- Bypass: Manual
- BMS protocol: ModBus
- Control: Wired control panel
- Casing material: EPP
- Humidity sensor: Optional
- CO2 sensor: Optional

	Unit of measurement	Enave 550 V A14 R
Connected air duct size	mm	200
Phases	-	1
Minimum supply voltage	V	230
Maximum supply voltage	V	230
Power supply frequency	Hz	50/60
Rated power	W	346
Unit current	A	2.4
Maximum airflow	m^3/h	720
Sound pressure level LpA at 3 m	dB(A)	38
Heat recovery efficiency, max	%	93
Heat exchanger type	-	Counter flow
Heat exchanger material	-	Polystyrene
Weight	kg	52
Supply filter	-	G4 / Coarse > 60% (option F7 / ePM1 60%)
Extract filter	-	G4 / Coarse > 60%
Transported air temperature (max)	°C	40
Transported air temperature (min)	°C	-25
Ambient air temperature min	°C	1
Ambient air temperature max	°C	40
Ingress protection rating	-	IP22
Ambient air humidity max	%	60

Ingress protection rating of the drive	-	IP44

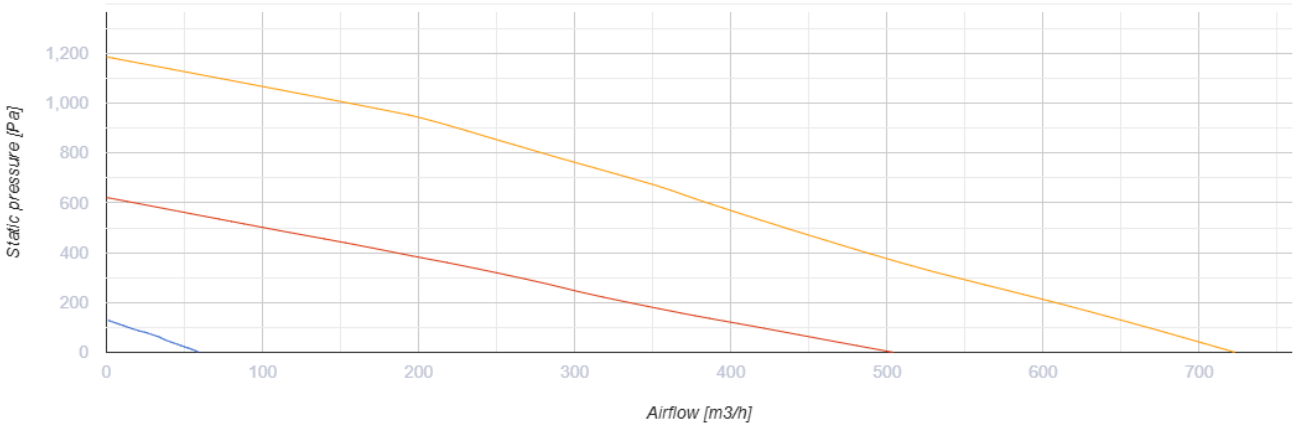

Dimensions

Ø D	H	H1	L	L1	W	W1
200	885	943	711	250	830	365

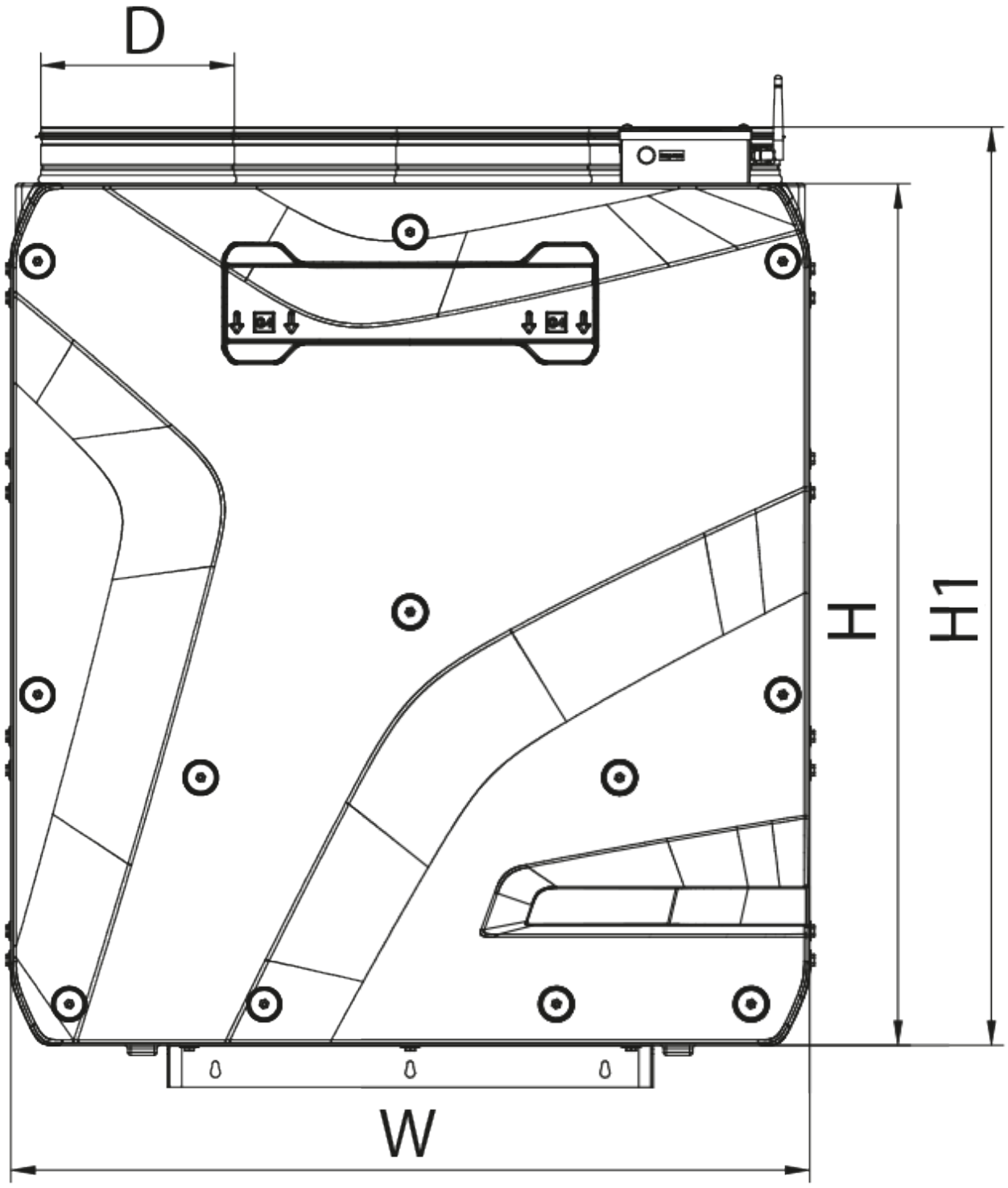
D
H
H1
W

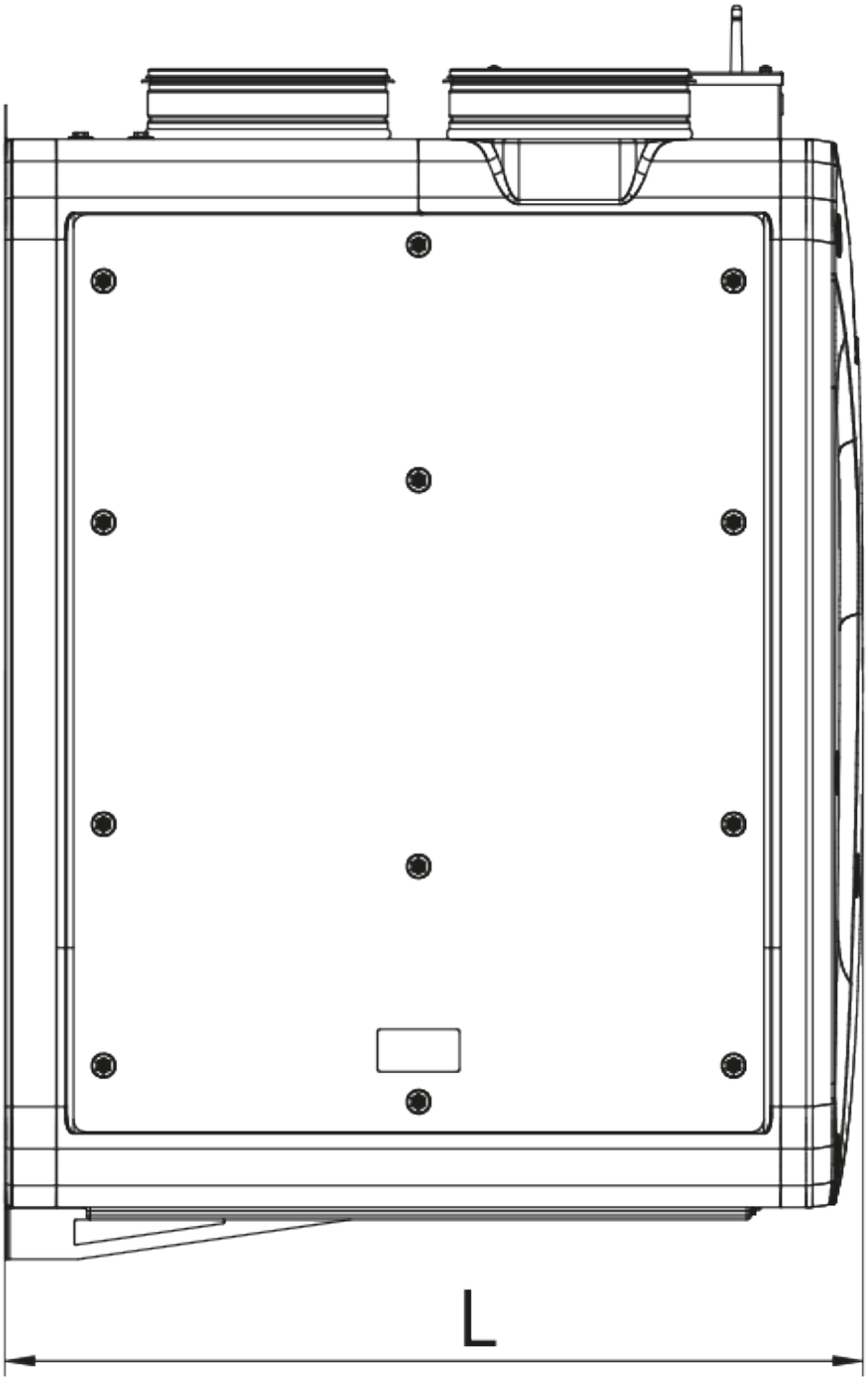
L

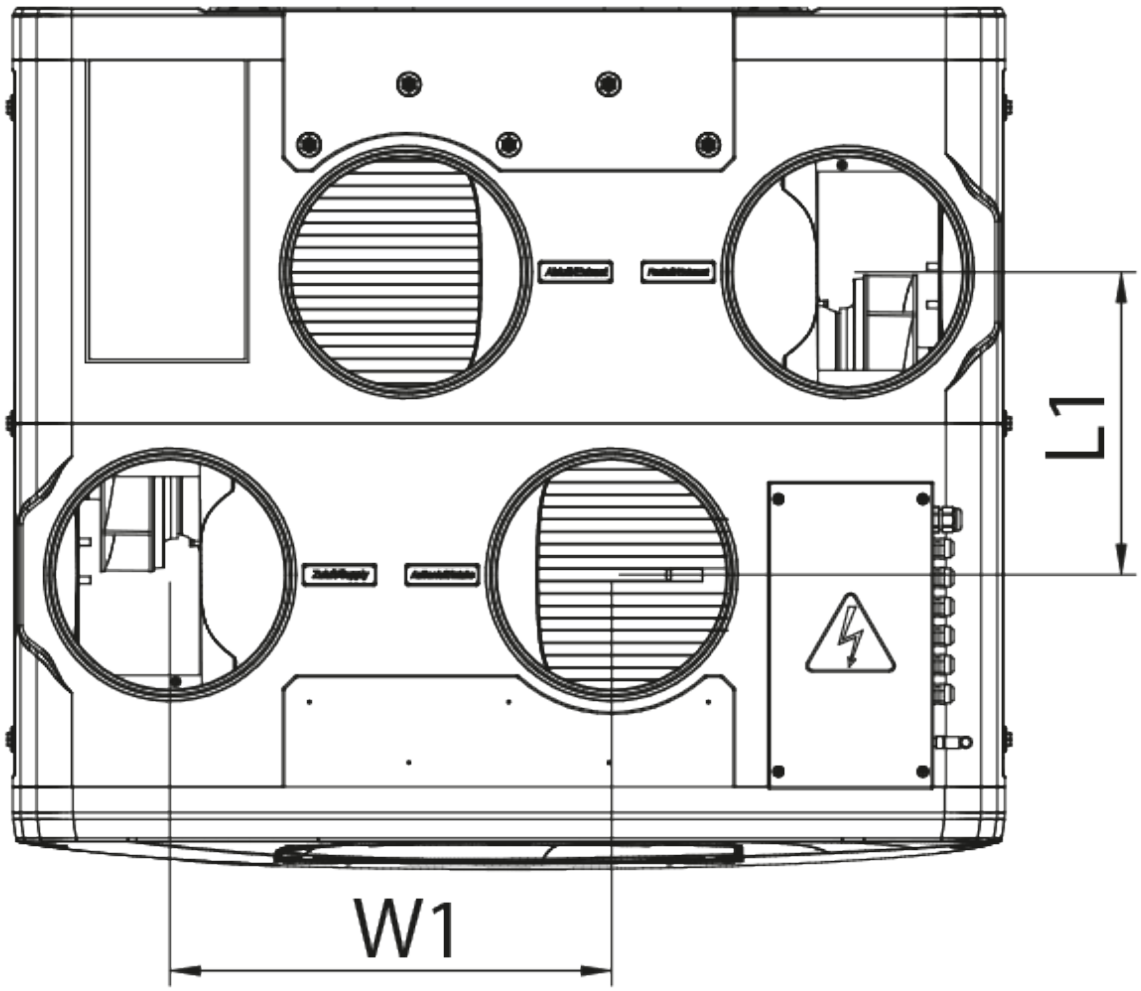

Accessories

Sensors

Name	Photo	Description

HV2		Humidity sensor
CO2-1		CO2 sensors
CO2-2		CO2 sensors
HR-S		Electro-mechanical humidistat

Condensation drainage

Name	Photo	Description
SH-32		Hydraulic U-trap to drain condensate from heat exchangers and coolers

For round ducts

Name	Photo	Description
SR 200/600		Silencers made of galvanized steel filled with non-combustible sound-absorbing material
SR 200/900		Silencers made of galvanized steel filled with non-combustible sound-absorbing material
SR 200/1200		Silencers made of galvanized steel filled with non-combustible sound-absorbing material

For round ducts

Name	Photo	Description
KRV 200		Air dampers for automatic air flow control in round ducts

Electric actuators

Name	Photo	Description
Belimo TF230		The actuators are designed for controlling air dampers with cross section up to 0.4 m² performing protection functions

Other accessories

Name	Photo	Description
SF 596x164x60 Coarse 90% G4		Panel filter G4
SF 596x164x60 ePM1 60% F7		F7 panel filter

Ecodesign

Trademark	Vents					
Model	Enave 550 V A14 R					
Specific energy consumption (SEC) (kWh/(m²/a))	Cold		Average		Warm	
	-80.9	A+	-42.2	A+	-17.3	E
Type of ventilation unit	Bidirectional					
Type of drive installed	Variable speed					
Type of heat recovery system	Recuperative					
Thermal efficiency of heat recovery (%)	86					
Maximum flow rate (m³/h)	667					
Electric power input (W)	341					
Reference flow rate (m³/s)	0.128					
Reference pressure difference (Pa)	50					
Specific power input (SPI) (W/(m³/h))	0.265					
Control typology	Local demand control					
Maximum internal leakage rates (%)	2.7					
Maximum external leakage rates (%)	2.7					
Sound power level (dB(A))	58					
The annual electricity consumption (AEC) (kWh/a)	Cold		Average		Warm	
	722		185		140	
The annual heating saved (AHS) (kWh/a)	Cold		Average		Warm	
	9019		4610		2085	