Enave 240 V A21 R CF



Vertical air handling units with a counterflow polystyrene or enthalpy heat exchanger

- Sound pressure level LpA at 3 m: 28
- Heat exchanger type: Counter flow
- Heat exchanger material: Polystyrene
- Sound-insulated casing
- Bypass: Auto
- Reheater: Optional
- BMS protocol: ModBus
- Control: Smartphone
- Casing material: EPP
- Humidity sensor: Optional
- CO2 sensor: Optional
- PM2.5 sensor: Optional

	Unit of measurement	Enave 240 V A21 R CF
Connected air duct size	mm	125
Phases	-	1
Maximum supply voltage	V	230
Minimum supply voltage	V	230
Power supply frequency	Hz	50/60
Rated power	W	190
Unit current	A	1.4
Maximum airflow	m³/h	235
Sound pressure level LpA at 3 m	dB(A)	28
Heat recovery efficiency, max	%	89
Heat exchanger type	-	Counter flow
Heat exchanger material	-	Polystyrene
Weight	kg	20
Transported air temperature (max)	°C	40
Transported air temperature (min)	°C	-25
Ambient air temperature min	°C	1
Ambient air temperature max	°C	40
Ingress protection rating	-	IP22
Ingress protection rating of the drive	-	IP44

Ambient air humidity max	%	60

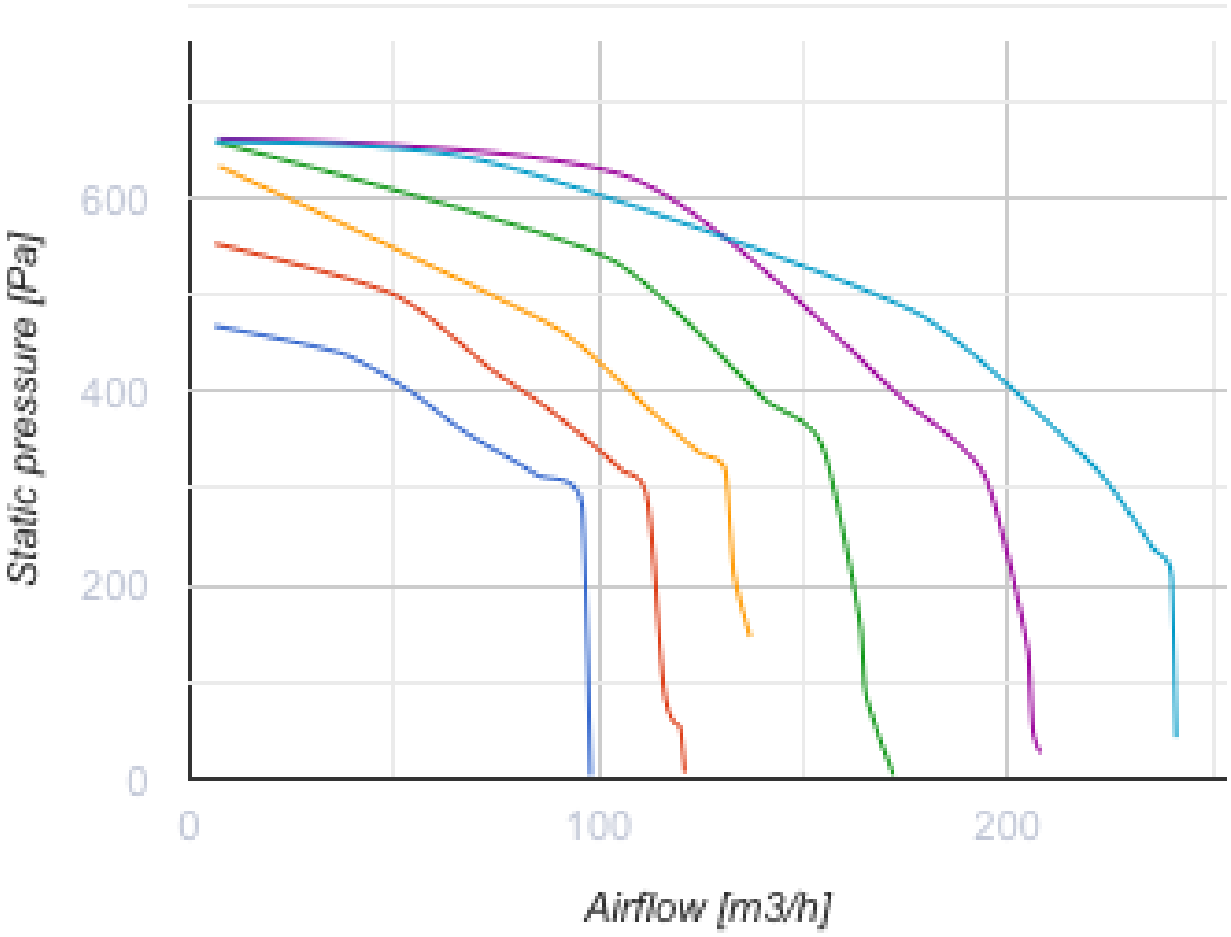

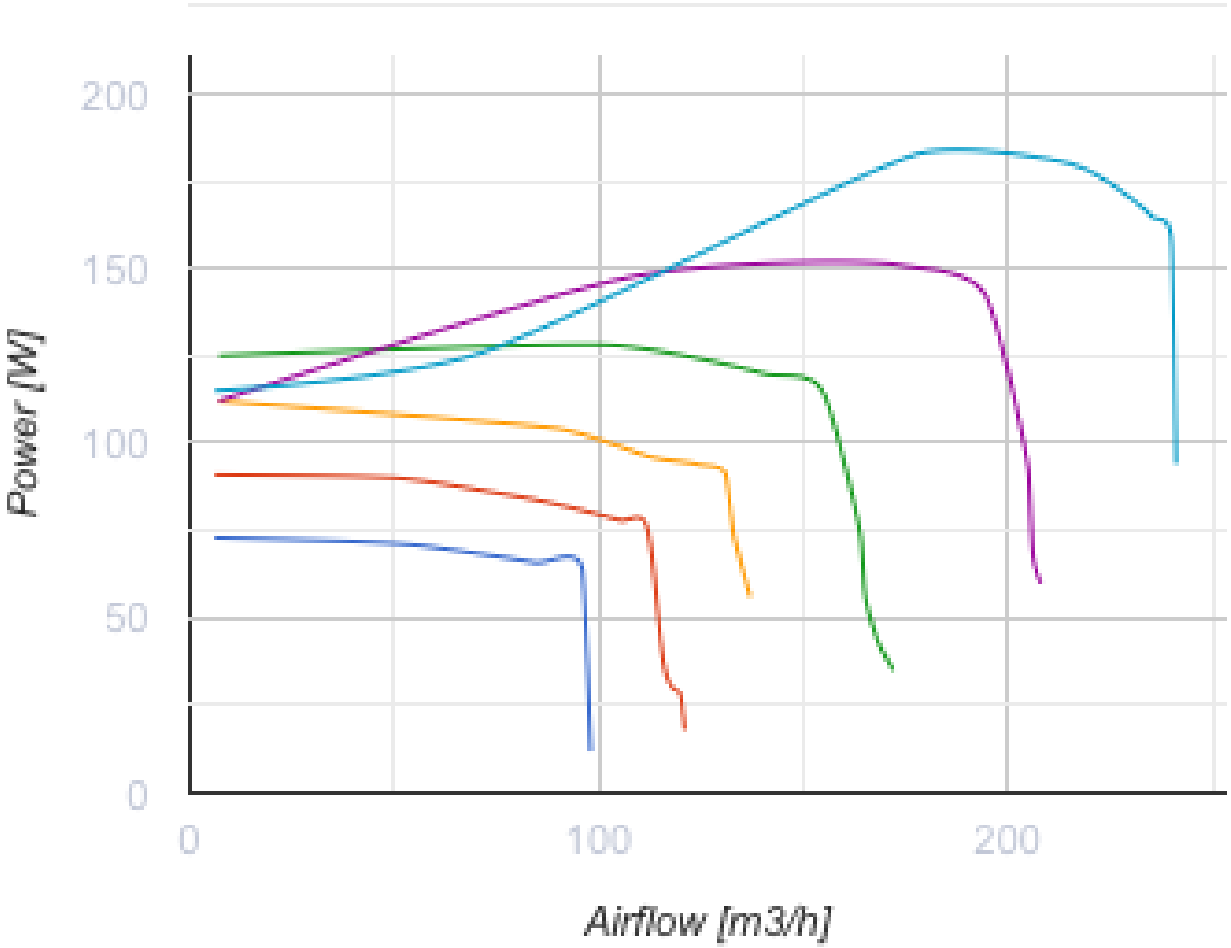

Dimensions

D	H	H1	L	L1	W	W1
125	900	958	452	190	598	273

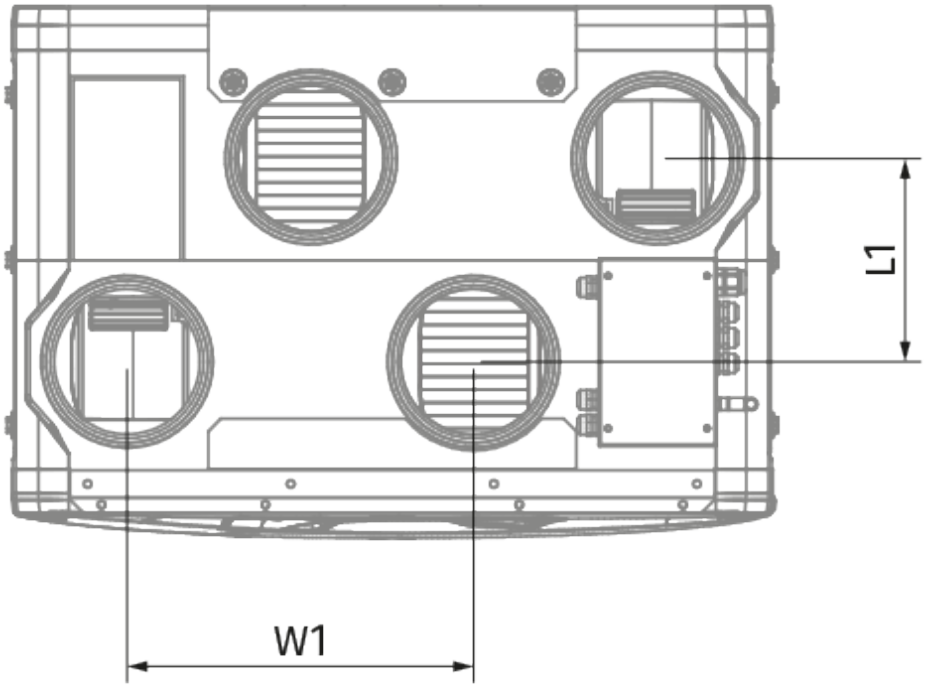
L1
W1

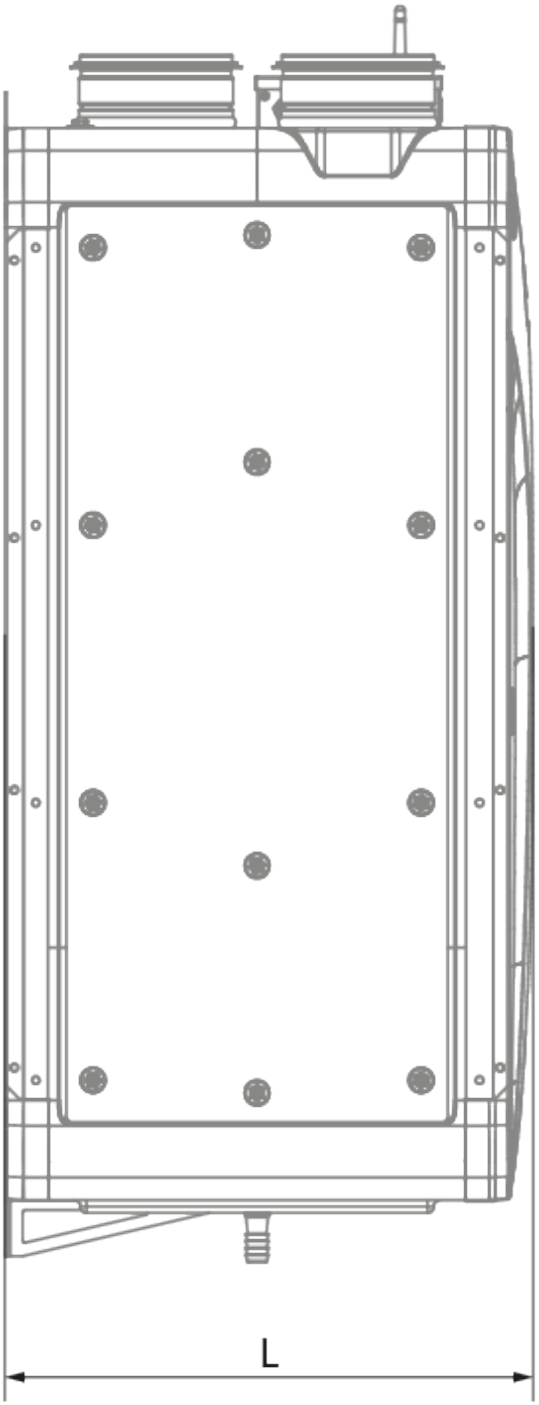
L

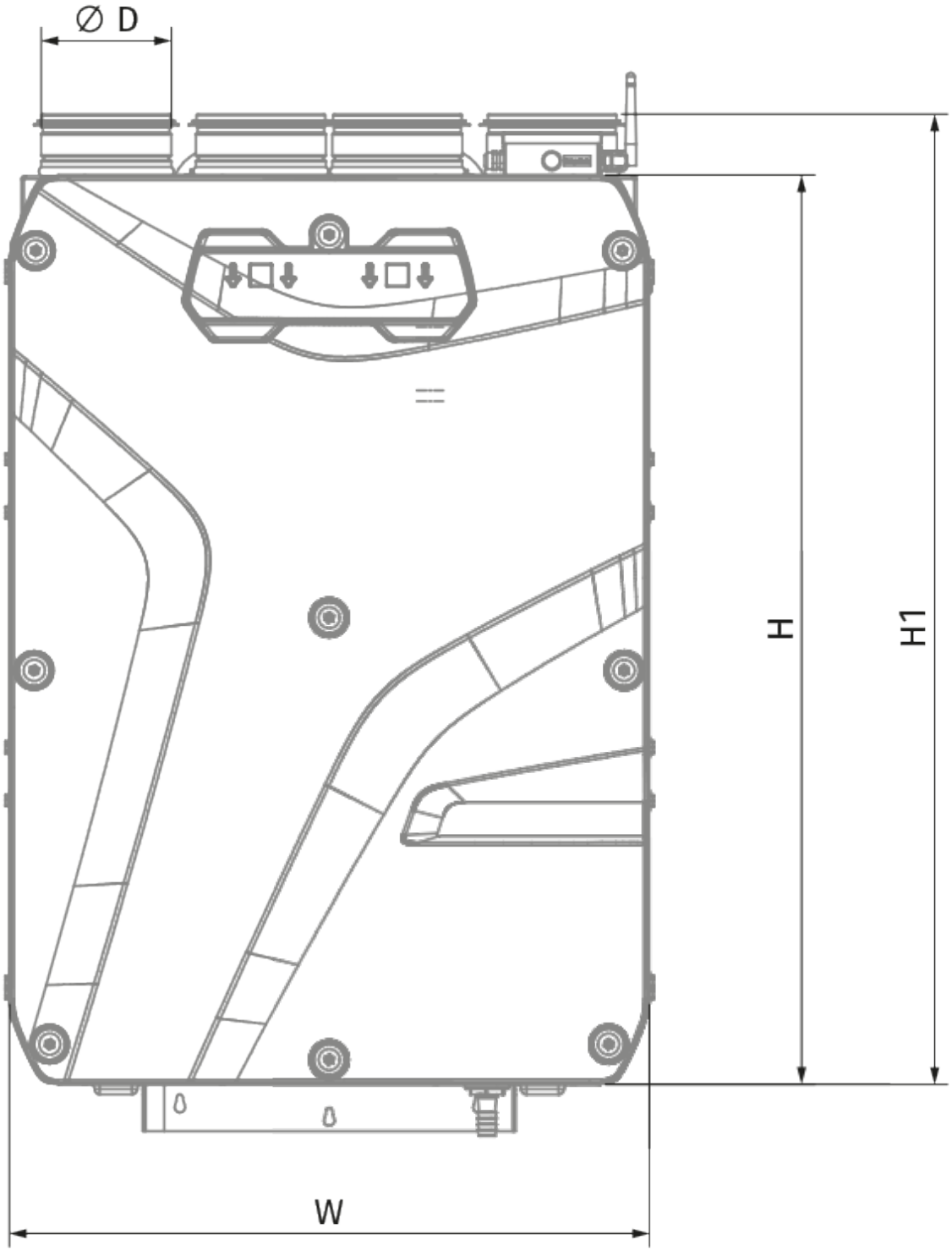

Accessories

Control Panels for AHU

Name	Photo	Description

A25		Touch screen control panel for controlling industrial and residential air handling units
A22		Control panels for controlling industrial and residential air handling units
A22 WiFi		Control panels for controlling industrial and residential air handling units

Sensors

Name	Photo	Description
HV2		Humidity sensor
CO2-1		CO2 sensors
CO2-2		CO2 sensors
HR-S		Electro-mechanical humidistat
CO2-3		CO2 sensor

Condensation drainage

Name	Photo	Description
SH-32		Hydraulic U-trap to drain condensate from heat exchangers and coolers

For round ducts

Name	Photo	Description
SR 125/600		Silencers made of galvanized steel filled with non-combustible sound-absorbing material
SR 125/900		Silencers made of galvanized steel filled with non-combustible sound-absorbing material

SR 125/1200		Silencers made of galvanized steel filled with non-combustible sound-absorbing material

For round ducts

Name	Photo	Description
KRV 125		Air dampers for automatic air flow control in round ducts

Electrical heaters

Name	Photo	Description
NKD 125-0,6-1 A21 V.2		Inline supply air reheaters with external control
NKD 125-0,8-1 A21 V.2		Inline supply air reheaters with external control
NKD 125-1,2-1 A21 V.2		Inline supply air reheaters with external control

Electric actuators

Name	Photo	Description
Belimo TF230		The actuators are designed for controlling air dampers with cross section up to 0.4 m² performing protection functions

Other accessories

Name	Photo	Description
SF 356x100x48 Coarse 90% G4		Panel filter G4
SF 356x100x48 ePM1 65% F7		F7 panel filter

Ecodesign

Trademark	Vents					
Model	Enave 240 V A21 R CF					
Specific energy consumption (SEC) (kWh/(m²/a))	Cold		Average		Warm	
	-81.3	A+	-42.4	A+	-17.5	E
Type of ventilation unit	Bidirectional					
Type of drive installed	Variable speed					
Type of heat recovery system	Recuperative					
Thermal efficiency of heat recovery (%)	87					
Maximum flow rate (m³/h)	235					
Electric power input (W)	175					
Reference flow rate (m³/s)	0.046					
Reference pressure difference (Pa)	50					
Specific power input (SPI) (W/(m³/h))	0.262					
Control typology	Local demand control					
Maximum internal leakage rates (%)	2.7					
Maximum external leakage rates (%)	2.7					
Sound power level (dB(A))	49					
The annual electricity consumption (AEC) (kWh/a)	Cold		Average		Warm	
	721		184		139	
The annual heating saved (AHS) (kWh/a)	Cold		Average		Warm	
	9060		4631		2094	