EH-17 black 100



Plastic outer hood

• Casing material: PVC

	Unit of measurement	EH-17 black 100
Connected air duct size	mm	100

Dimensions

B	H	L	ØD
212	250	55.5	100

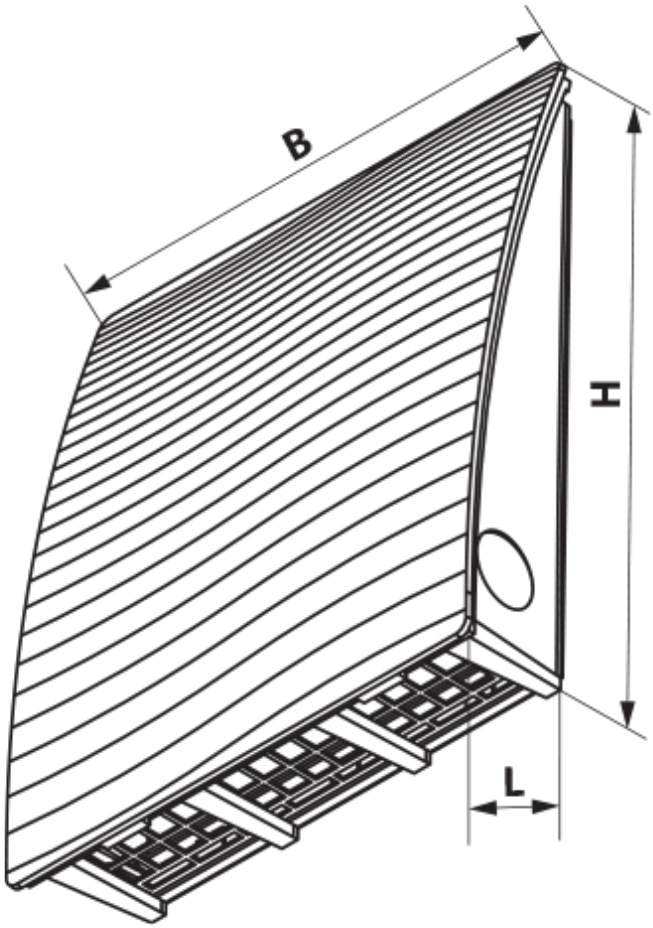
B
H
L

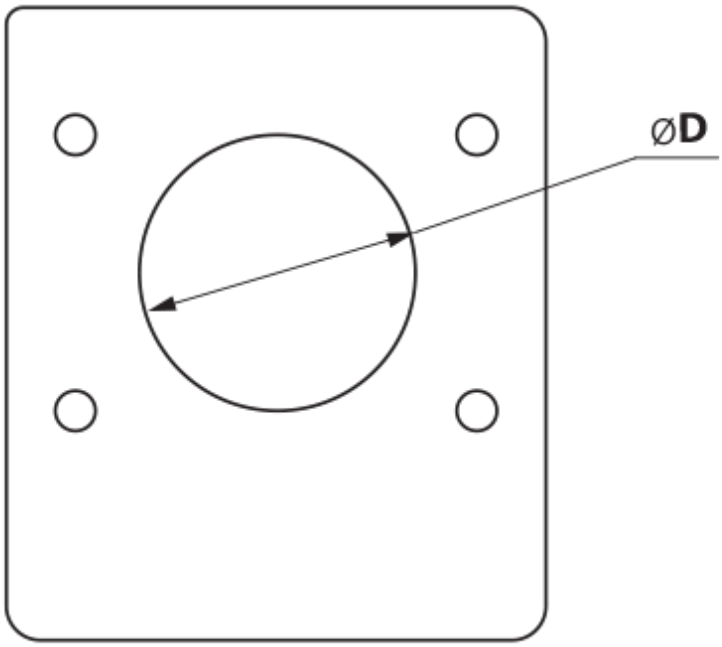
ØD