DuoVent 315 EC

Centrifugal fans in a metal casing for round air ducts

- Sound pressure level LpA at 3 m: 45
- Sound-insulated casing
- Impeller type: Mixed-flow
- Casing material: Galvanized steel

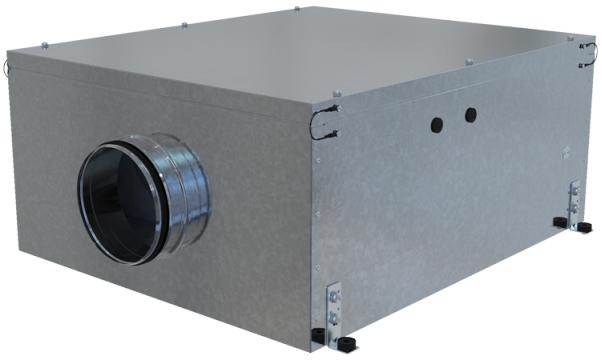

	Unit of measurement	DuoVent 315 EC
Connected air duct size	mm	315
Phases	-	1
Minimum supply voltage	V	220
Maximum supply voltage	V	240
Power supply frequency	Hz	50/60
Rated power	W	535
Unit current	A	1.56
Maximum airflow	m^3/h	2780
Rotation speed at 50hz	-	2474
Sound pressure level LpA at 3 m	dB(A)	45
Weight	kg	97
Transported air temperature (max)	°C	55
Transported air temperature (min)	°C	-25
Ingress protection rating	-	IPX4
Ingress protection rating of the drive	-	IP54

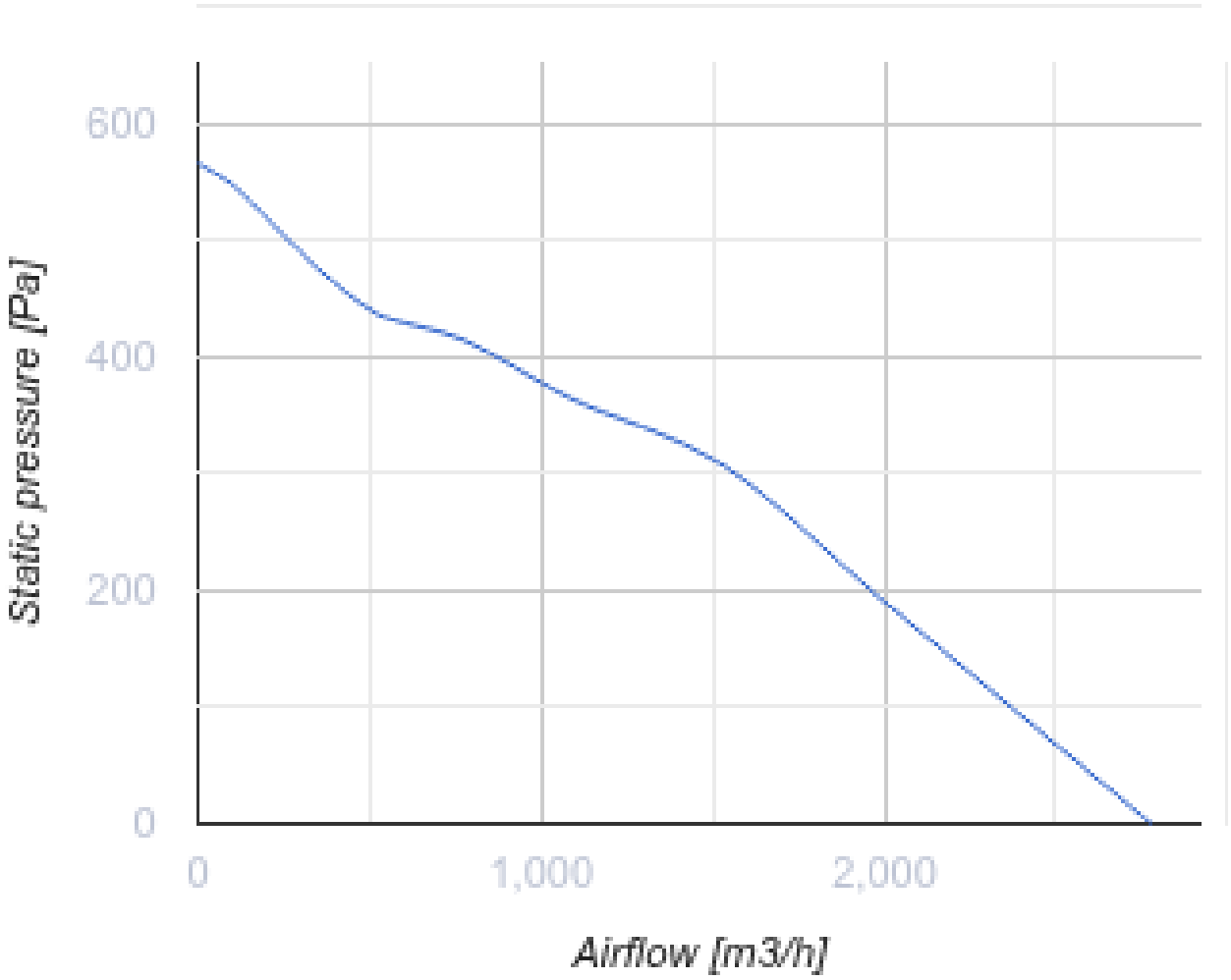
600
400
200
0
Static pressure [Pa]
0
1,000
2,000
Airflow [m3/h]

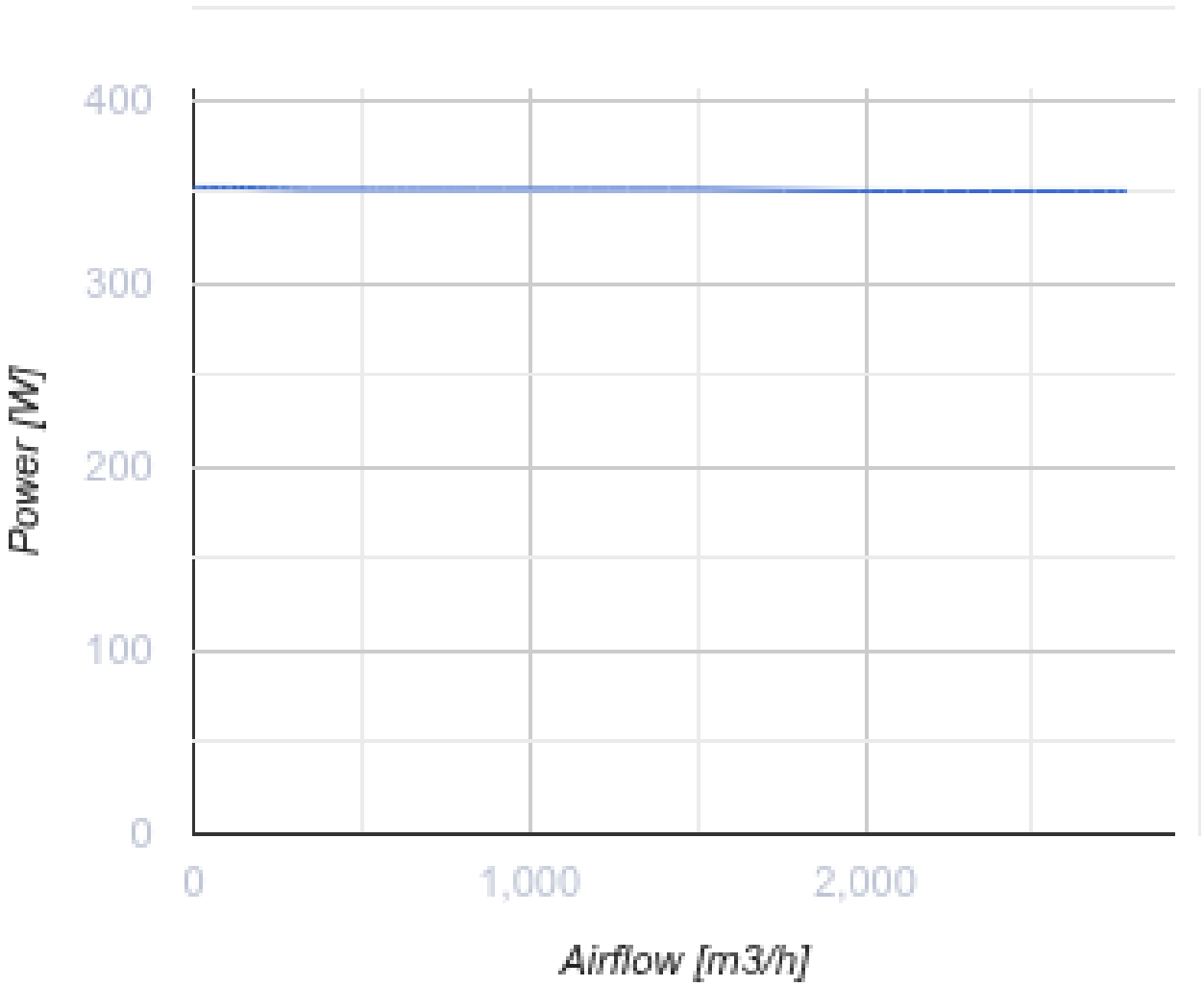

Dimensions

D	L	L1	H	W	W1
314	1293	1170	520	1092	1010

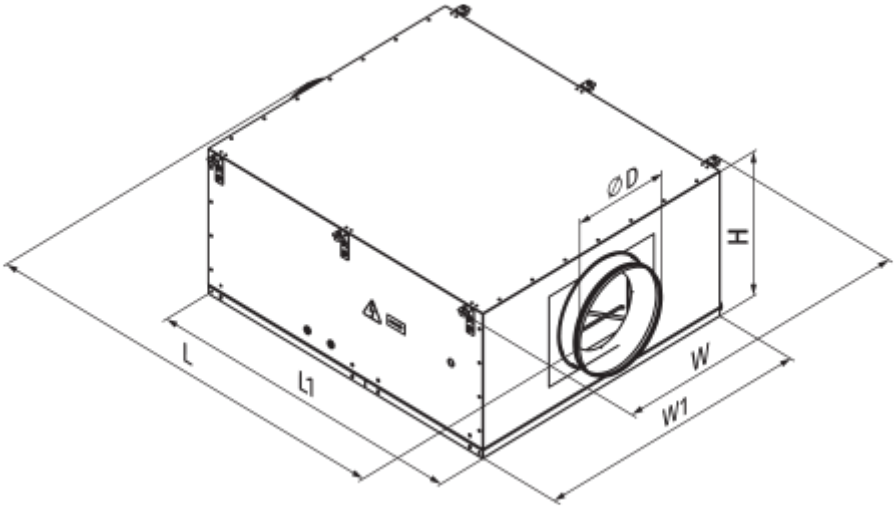
ØD
H
L
L1
W
W1

Ecodesign

Trademark	Vents
Model	DuoVent 315 EC
Type of drive installed	External MSD or VSD
Type of heat recovery system	None
Nominal external pressure (Pa)	307
Maximum external leakage rates (%)	2.7
Static efficiency (%)	37.9
Declared typology	NRVU UVU
Effective electric power input (kW)	0.352
Sound power level (dB(A))	65