DuoVent 150 EC

Centrifugal fans in a metal casing for round air ducts

- Sound pressure level LpA at 3 m: 37.5
- Sound-insulated casing
- Impeller type: Mixed-flow
- Casing material: Galvanized steel

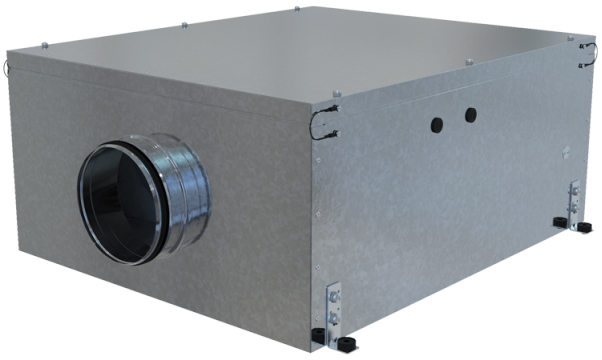

	Unit of measurement	DuoVent 150 EC
Connected air duct size	mm	150
Phases	-	1
Minimum supply voltage	V	220
Maximum supply voltage	V	240
Power supply frequency	Hz	50/60
Rated power	W	56
Unit current	A	0.48
Maximum airflow	m^3/h	450
Rotation speed at 50hz	-	3390
Sound pressure level LpA at 3 m	dB(A)	37.5
Weight	kg	28
Transported air temperature (max)	°C	55
Transported air temperature (min)	°C	-25
Ingress protection rating	-	IPX4
Ingress protection rating of the drive	-	IP44

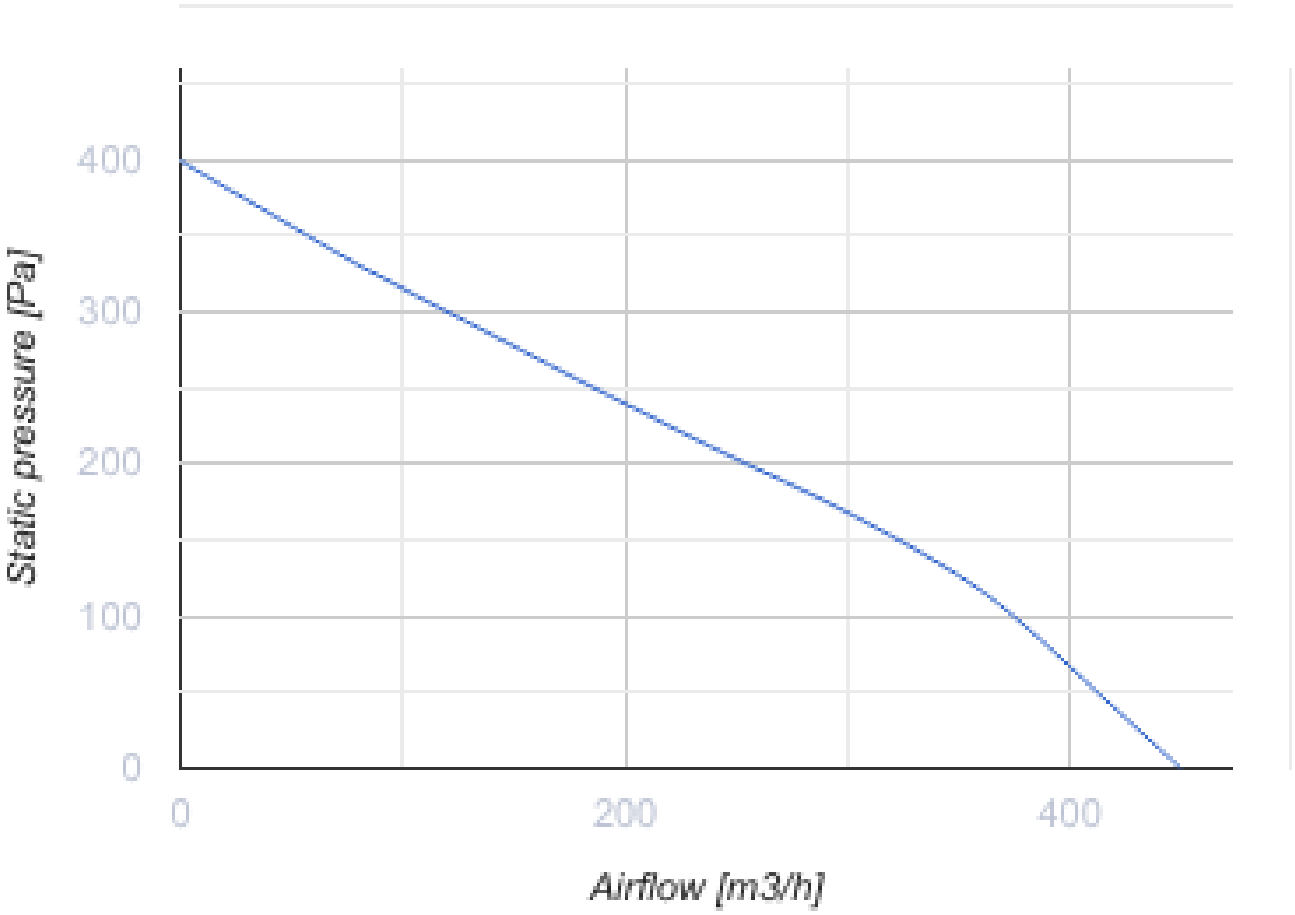
Static pressure [Pa]
400
300
200
100
0
0
200
400
Airflow [m3/h]

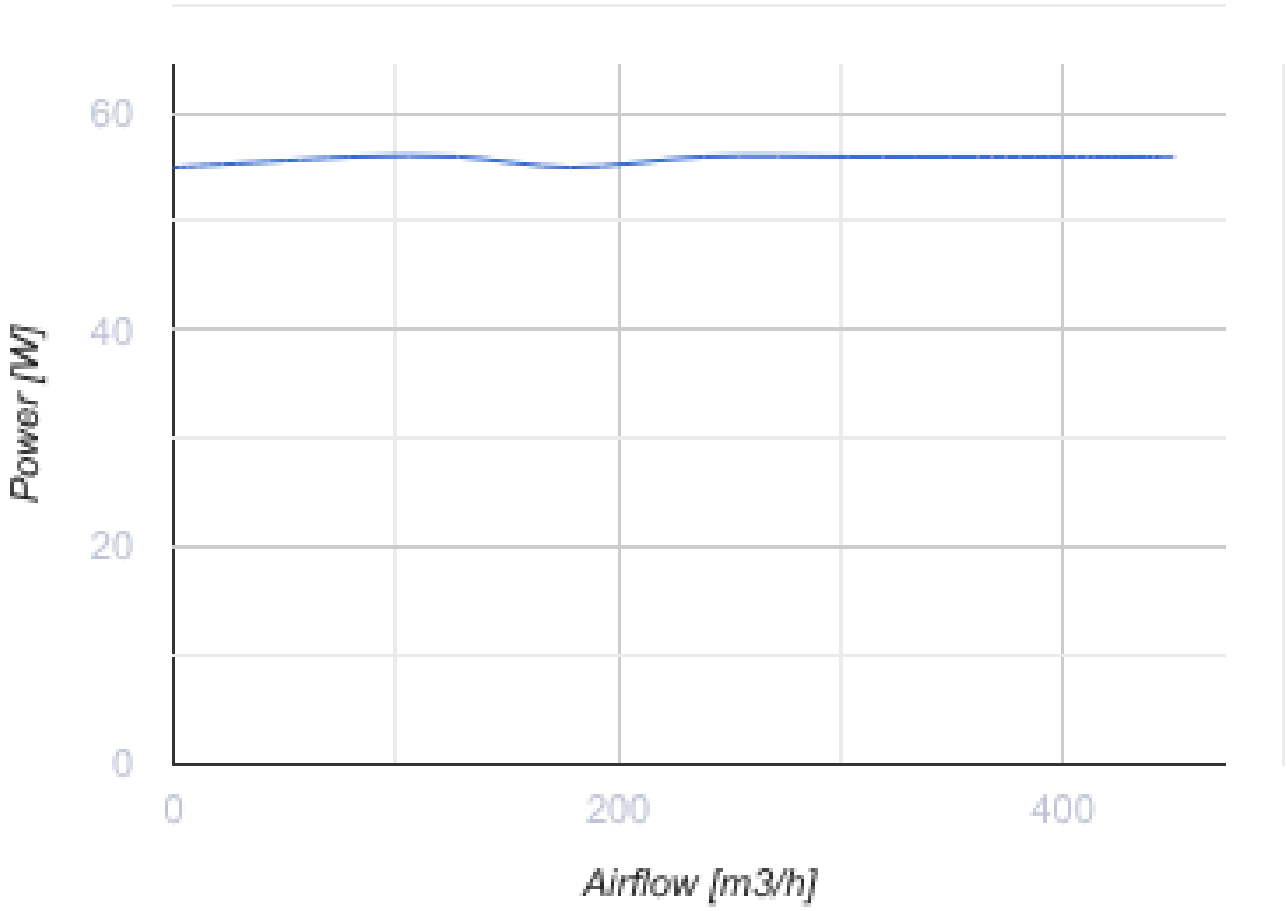

Dimensions

D	L	L1	H	W	W1
149	975	850	321	621	540

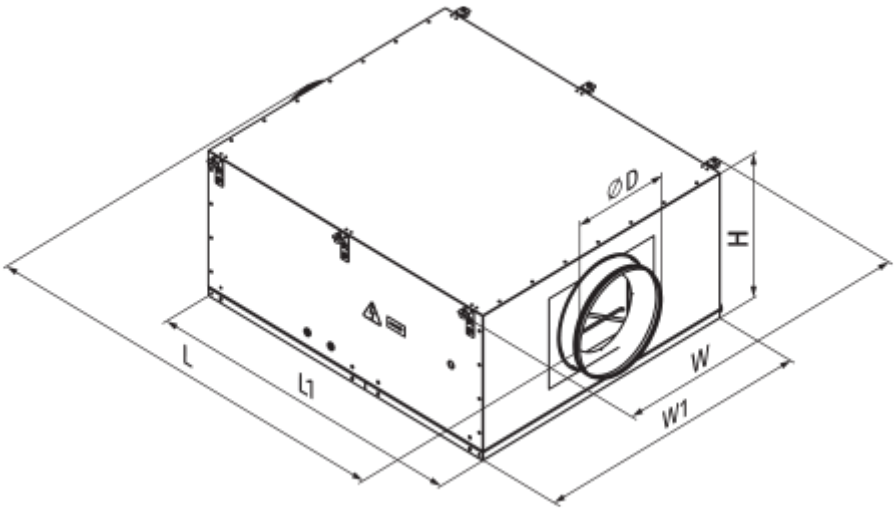

Ecodesign

Trademark	Vents
Model	DuoVent 150 EC
Type of drive installed	External MSD or VSD
Type of heat recovery system	None
Nominal external pressure (Pa)	211
Maximum external leakage rates (%)	2.7
Static efficiency (%)	25.5
Declared typology	NRVU UVU
Effective electric power input (kW)	0.056
Sound power level (dB(A))	57