# DMZ 555x555

Metal moisture-resistant access doors with a lock for bathrooms



| | Unit of measurement | DMZ 555x555 |
|---|---|---|

## Dimensions

| H | B | H1 | B2 | H2 | B1 | L |
|---|---|---|---|---|---|---|
| 591.5 | 591.5 | 551.5 | 553.1 | 553.1 | 551.5 | 25 |

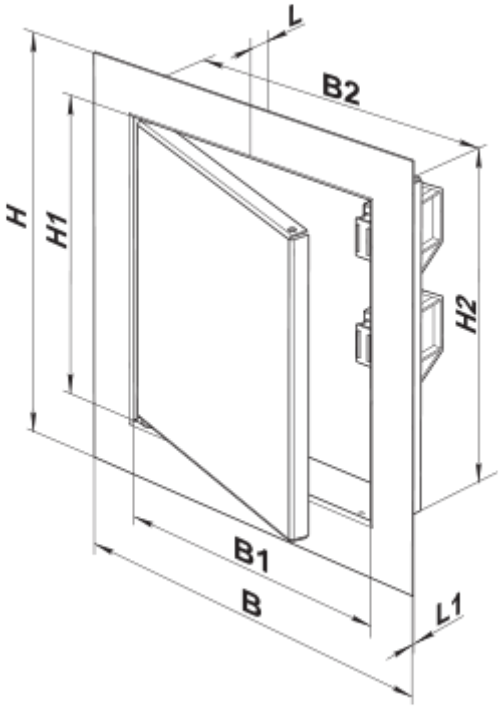
L
B2
H
H1
H2
B1
B
L1