DMZ 350x350

Metal moisture-resistant access doors with a lock for bathrooms



	Unit of measurement	DMZ 350x350

Dimensions

H	B	H1	B2	H2	B1	L
386.5	386.5	346.5	348.1	348.1	346.5	25

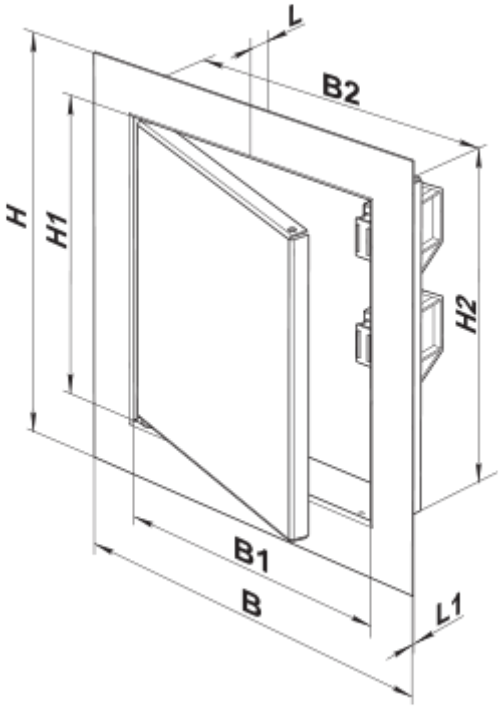
L
B2
H
H1
H2
B1
B
L1