DMZ 250x450

Metal moisture-resistant access doors with a lock for bathrooms



	Unit of measurement	DMZ 250x450

Dimensions

H	B	H1	B2	H2	B1	L
486.5	286.5	446.5	248.1	448.1	246.5	25

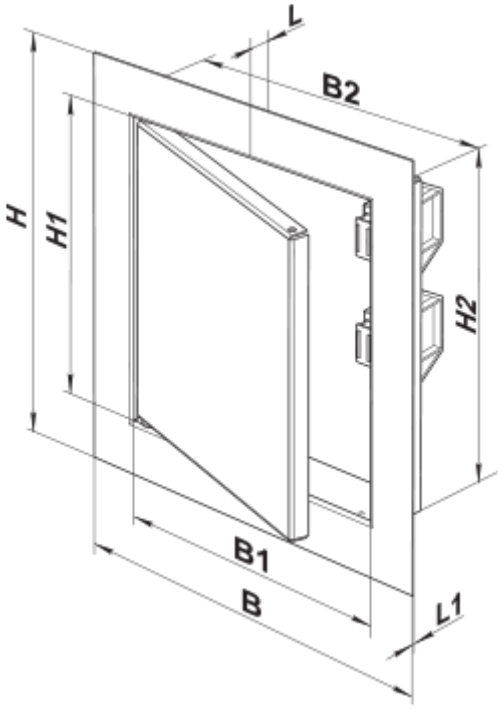
L
B2
H
H1
H2
B1
B
L1