DMZ 250x400

Metal moisture-resistant access doors with a lock for bathrooms



	Unit of measurement	DMZ 250x400

Dimensions

H	B	H1	B2	H2	B1	L
436.5	286.5	396.5	248.1	398.1	246.5	25

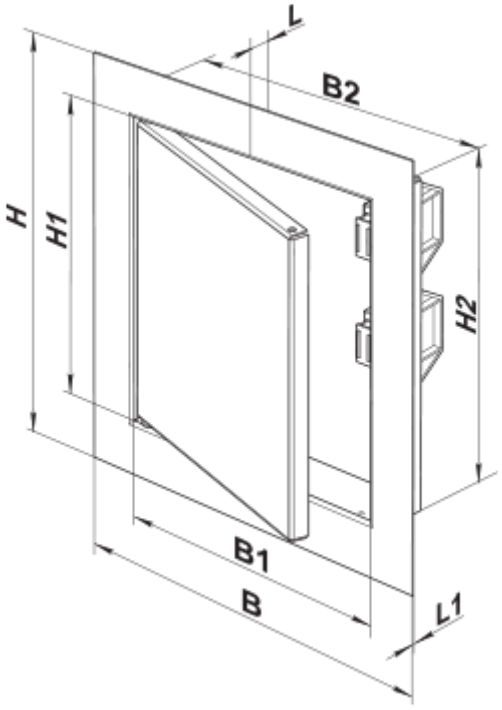
L
B2
H
H1
H2
B1
B
L1