DMZ 225x590

Metal moisture-resistant access doors with a lock for bathrooms



	Unit of measurement	DMZ 225x590

Dimensions

H	B	H1	B2	H2	B1	L
626.5	261.5	586.5	223.1	588.1	221.5	25

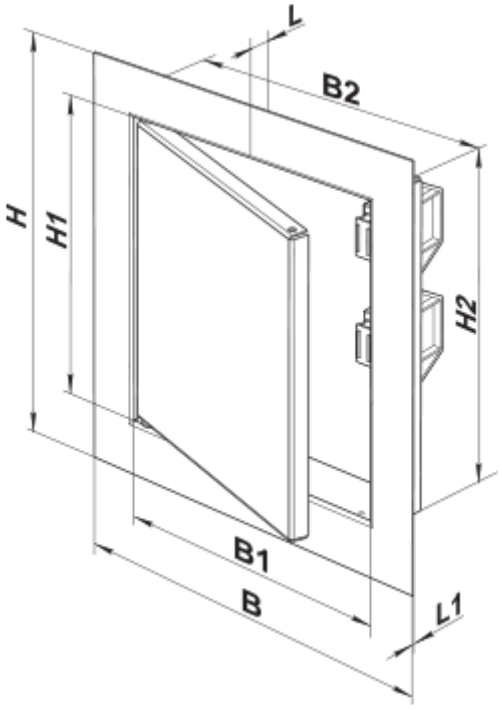
L
B2
H
H1
H2
B1
B
L1