DMZ 100x100

Metal moisture-resistant access doors with a lock for bathrooms



	Unit of measurement	DMZ 100x100

Dimensions

H	B	H1	B2	H2	B1	L
136.5	136.5	96.5	98.1	98.1	96.5	25

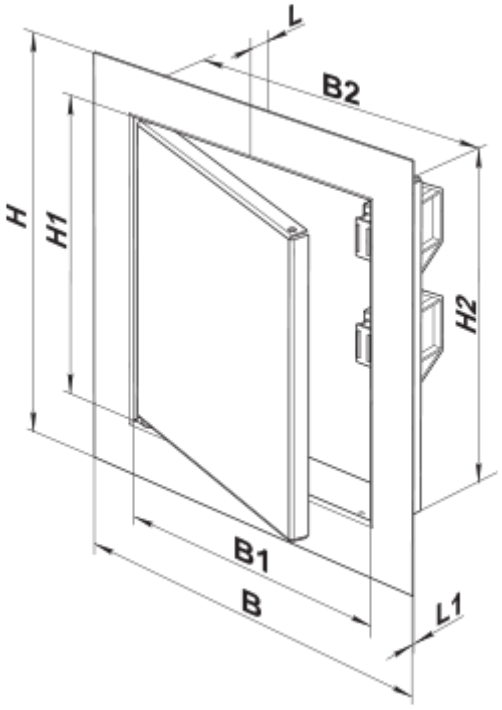
L
B2
H
H1
H2
B1
B
L1