# DMV 600x800

Metal access doors with vents and magnets for bathrooms



| | Unit of measurement | DMV 600x800 |
|---|---|---|

## Dimensions

| H | B | H1 | B2 | H2 | B1 | L |
|---|---|---|---|---|---|---|
| 836.5 | 636.5 | 596.5 | 598.1 | 798.1 | 796.5 | 25 |

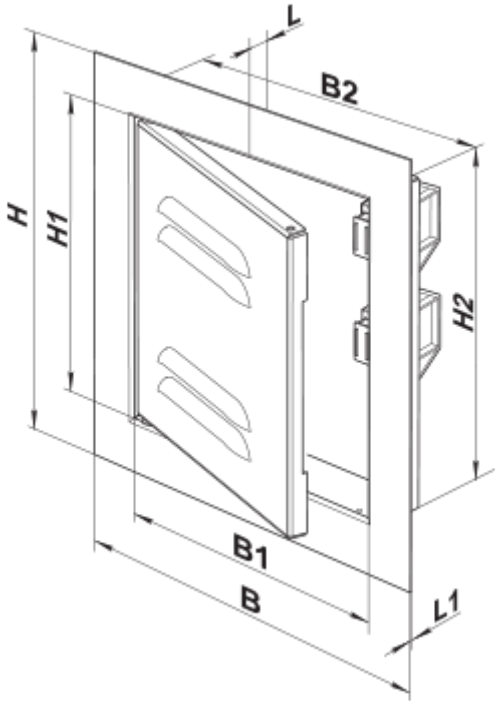
L
B2
H
H1
H2
B1
B
L1