DMV 555x555

Metal access doors with vents and magnets for bathrooms



	Unit of measurement	DMV 555x555

Dimensions

H	B	H1	B2	H2	B1	L
591.5	591.5	551.5	553.1	553.1	551.5	25

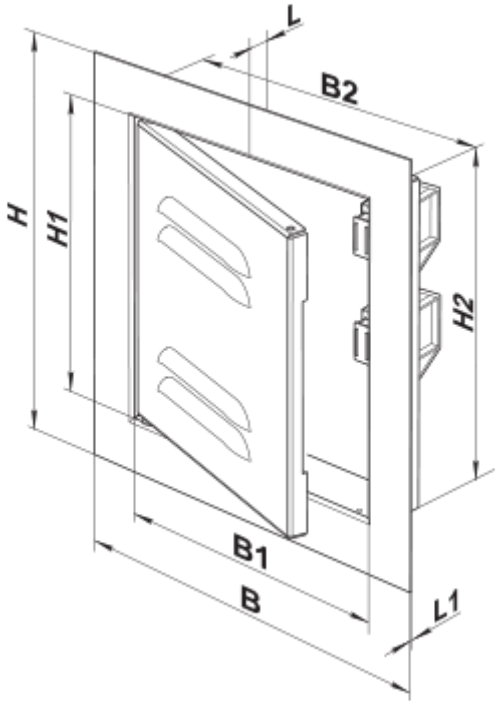
L
B2
H
H1
H2
B1
B
L1