DMV 450x450

Metal access doors with vents and magnets for bathrooms



	Unit of measurement	DMV 450x450

Dimensions

H	B	H1	B2	H2	B1	L
486.5	486.5	446.5	448.1	448.1	446.5	25

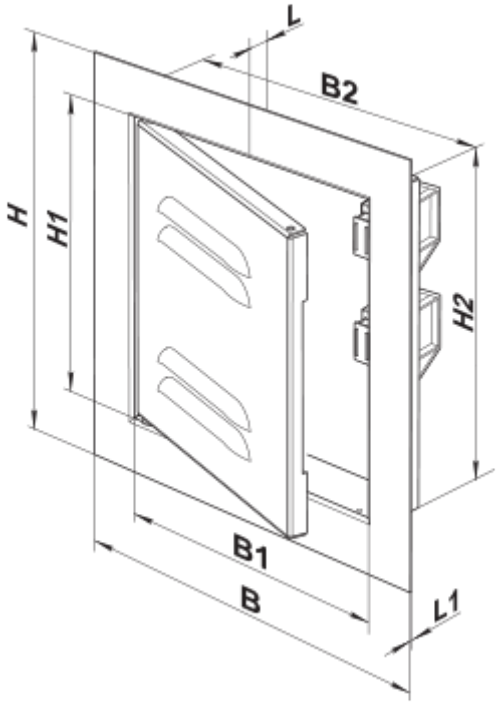
L
B2
H
H1
H2
B1
B
L1