DMV 300x500

Metal access doors with vents and magnets for bathrooms



	Unit of measurement	DMV 300x500

Dimensions

H	B	H1	B2	H2	B1	L
536.5	336.5	496.5	298.1	498.1	296.5	25

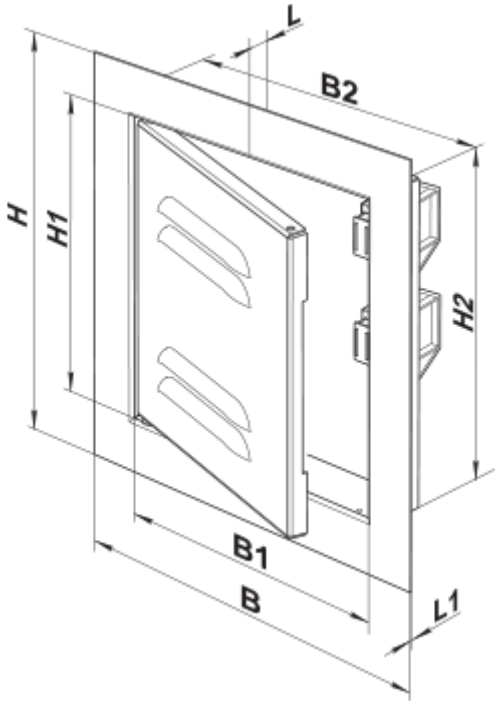
L
B2
H
H1
H2
B1
B
L1