DMV 200x400

Metal access doors with vents and magnets for bathrooms



	Unit of measurement	DMV 200x400

Dimensions

H	B	H1	B2	H2	B1	L
436.5	236.5	396.5	198.1	398.1	196.5	25

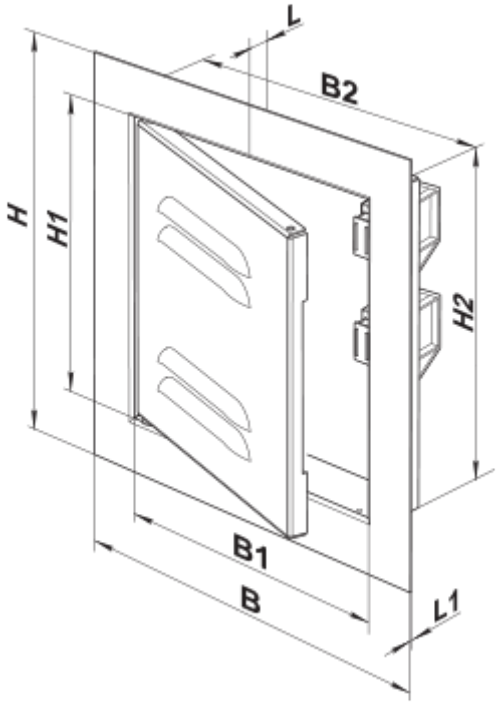
L
B2
H
H1
H2
B1
B
L1