DMV 200x350

Metal access doors with vents and magnets for bathrooms



	Unit of measurement	DMV 200x350

Dimensions

H	B	H1	B2	H2	B1	L
386.5	236.5	346.5	198.1	348.1	196.5	25

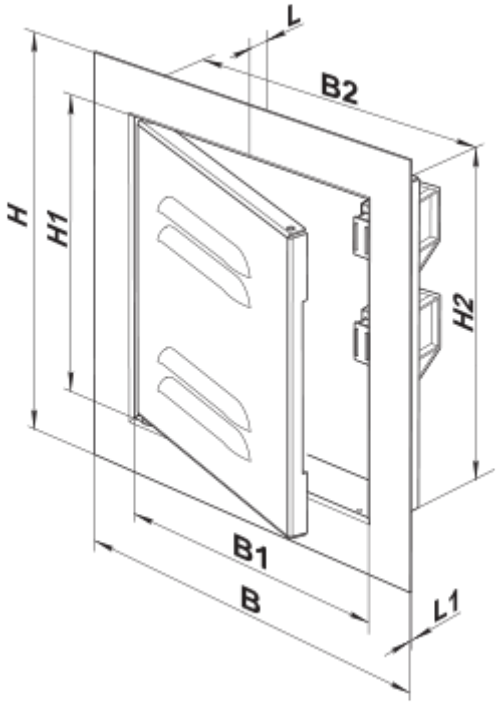
L
B2
H
H1
H2
B1
B
L1