DMV 200x200

Metal access doors with vents and magnets for bathrooms



	Unit of measurement	DMV 200x200

Dimensions

H	B	H1	B2	H2	B1	L
236.5	236.5	196.5	198.1	198.1	196.5	25

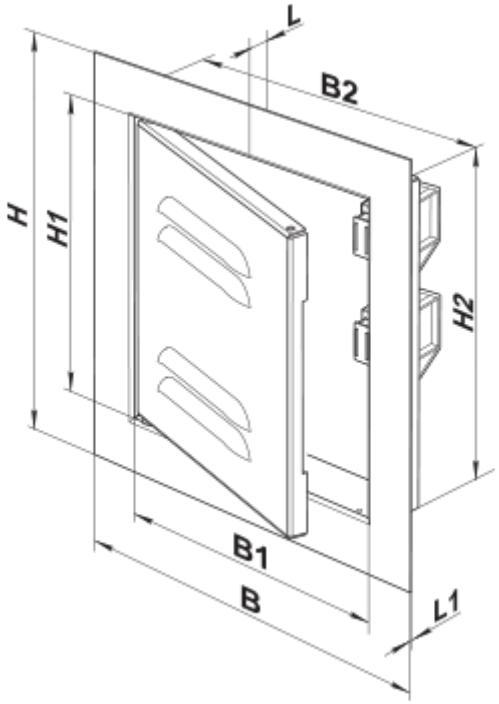
L
B2
H
H1
H2
B1
B
L1