DMV 150x250

Metal access doors with vents and magnets for bathrooms



	Unit of measurement	DMV 150x250

Dimensions

H	B	H1	B2	H2	B1	L
286.5	186.5	246.5	148.1	248.1	146.5	25

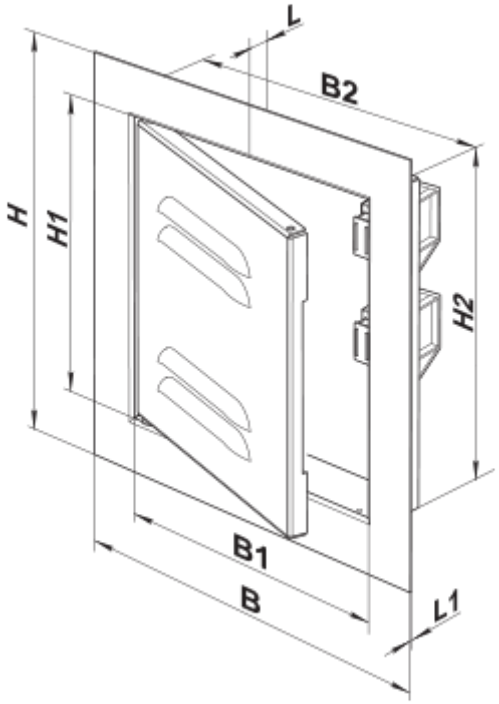
L
B2
H
H1
H2
B1
B
L1