DMR 400x500

Metal moisture-resistant access doors with a plastic handle for bathrooms



	Unit of measurement	DMR 400x500

Dimensions

H	B	H1	B2	H2	B1	L
536.5	436.5	496.5	398.1	498.1	396.5	25

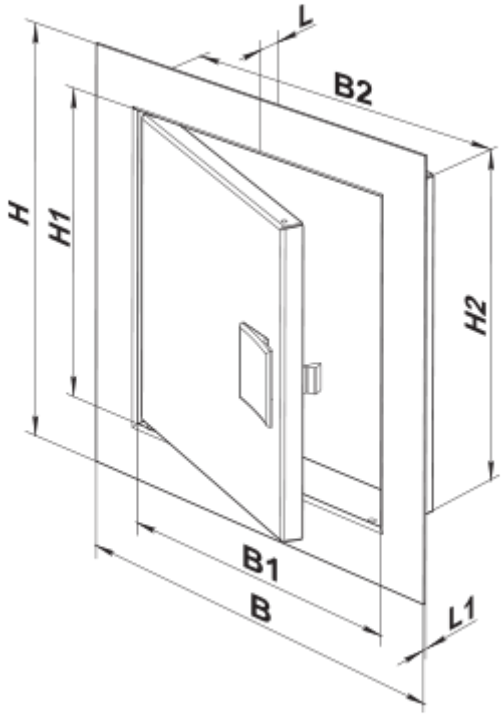
L
B2
H
H1
H2
B1
B
L1