DMR 225x300

Metal moisture-resistant access doors with a plastic handle for bathrooms



	Unit of measurement	DMR 225x300

Dimensions

H	B	H1	B2	H2	B1	L
336.5	261.5	296.5	223.1	298.1	221.5	25

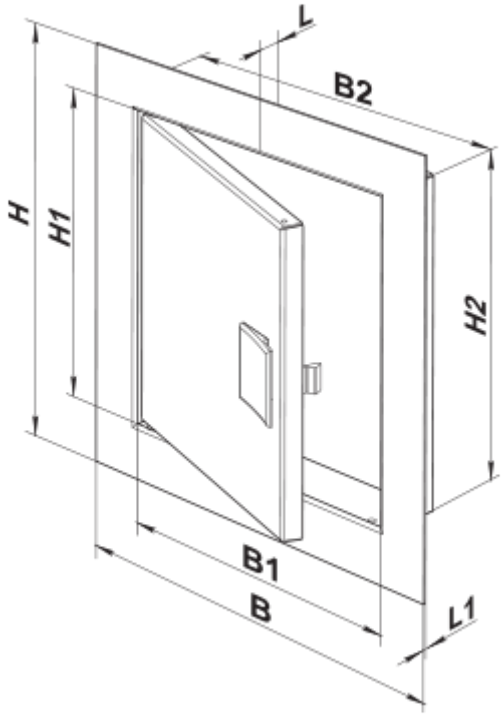
L
B2
H
H1
H2
B1
B
L1