DMR 200x250

Metal moisture-resistant access doors with a plastic handle for bathrooms



	Unit of measurement	DMR 200x250

Dimensions

H	B	H1	B2	H2	B1	L
286.5	236.5	246.5	198.1	248.1	196.5	25

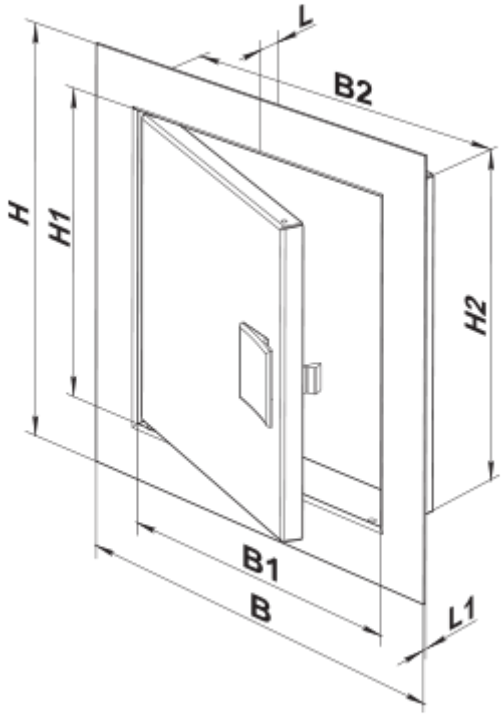
L
B2
H
H1
H2
B1
B
L1