DMR 200x200

Metal moisture-resistant access doors with a plastic handle for bathrooms



	Unit of measurement	DMR 200x200

Dimensions

H	B	H1	B2	H2	B1	L
236.5	236.5	196.5	198.1	198.1	196.5	25

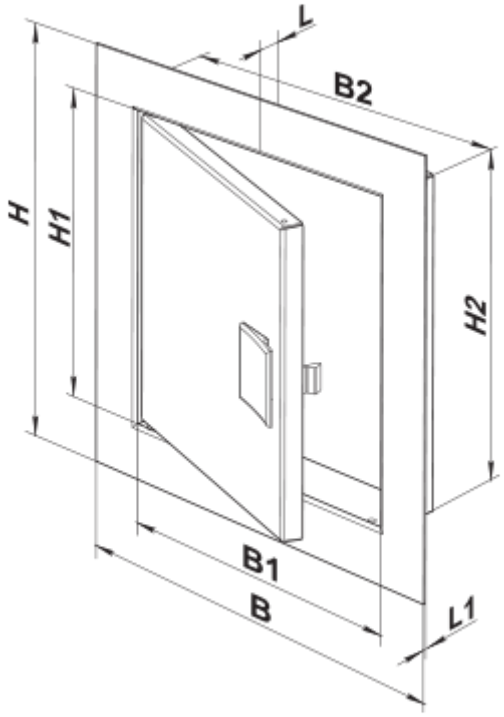
L
B2
H
H1
H2
B1
B
L1