# DMR 150x300

Metal moisture-resistant access doors with a plastic handle for bathrooms



| | Unit of measurement | DMR 150x300 |
|---|---|---|

## Dimensions

| H | B | H1 | B2 | H2 | B1 | L |
|---|---|---|---|---|---|---|
| 336.5 | 186.5 | 296.5 | 148.1 | 298.1 | 146.5 | 25 |

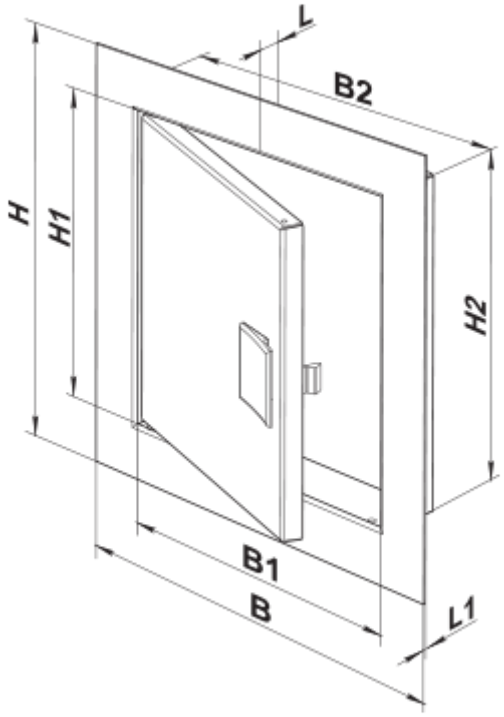
L
B2
H
H1
H2
B1
B
L1