DM 450x250

Metal moisture-resistant access doors for bathrooms

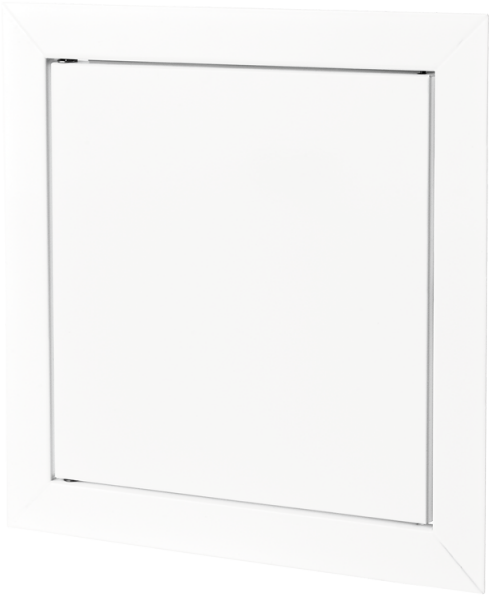

	Unit of measurement	DM 450x250

Dimensions

H	B	H1	B2	H2	B1	L
286.5	486.5	246.5	448.1	248.1	446.5	25

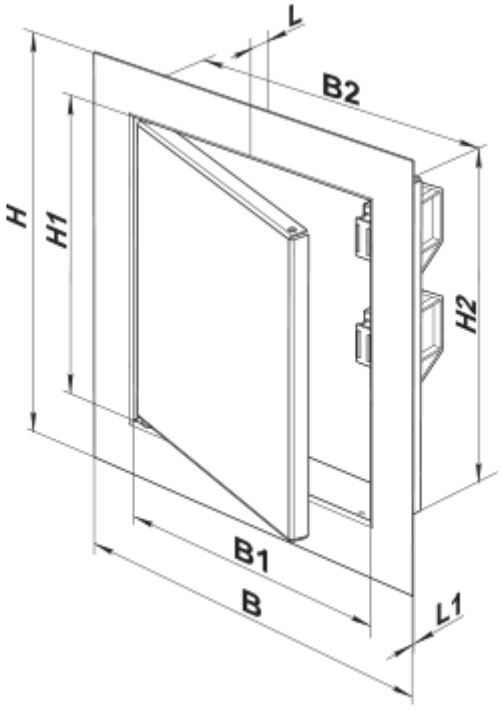
L
B2
H
H1
H2
B1
B
L1