DM 300x400

Metal moisture-resistant access doors for bathrooms

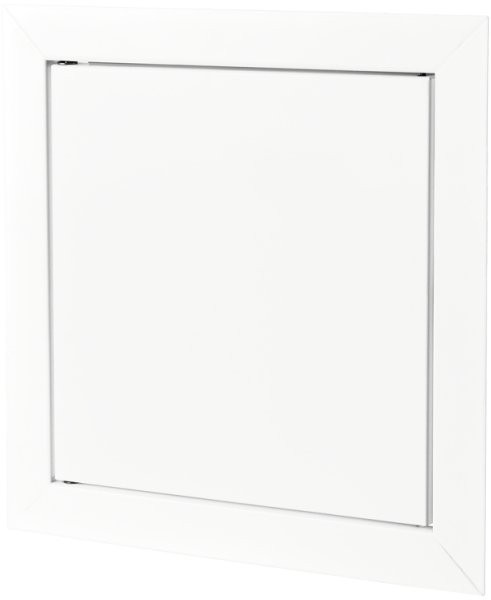

	Unit of measurement	DM 300x400

Dimensions

H	B	H1	B2	H2	B1	L
436.5	336.5	396.5	298.1	398.1	296.5	25

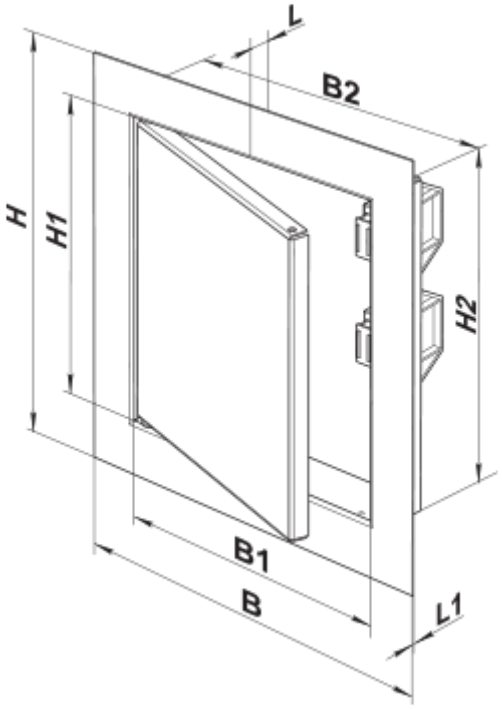
L
B2
H
H1
H2
B1
B
L1