DKP 250x300

Metal access doors with PVC for fixing ceramic tiles and magnets for bathrooms



	Unit of measurement	DKP 250x300

Dimensions

B	H	B2	H2	B1	H1	L
256	306	245	295	253	303	30

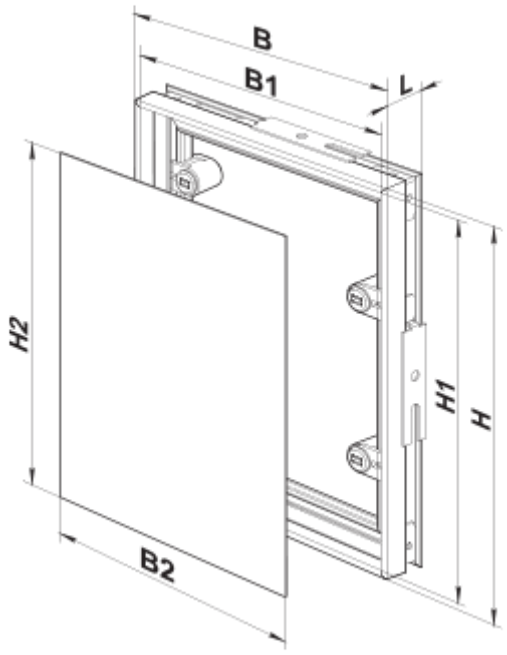
B
B1
L
H2
H1
H
B2