DKM 250x400

Metal access doors for fixing ceramic tiles and with magnets for bathrooms



	Unit of measurement	DKM 250x400

Dimensions

B	H	B2	H2	L
263.6	413.6	250	400	26

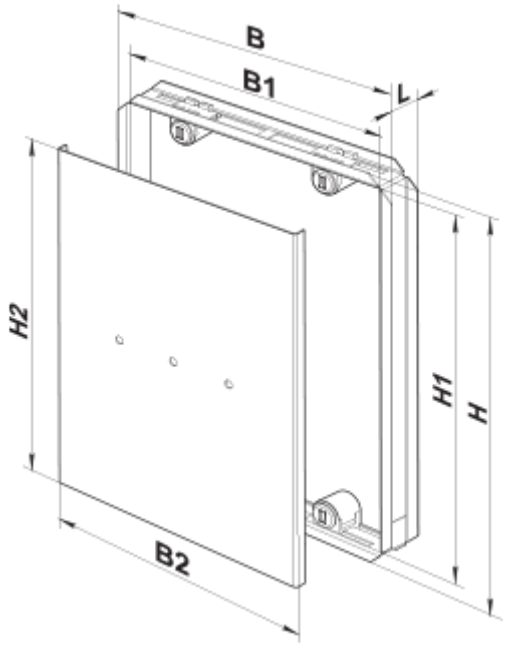
B
B1
L
H2
H1
H
B2