DG1 600x600

Metal access doors with a plasterboard plate for bathrooms



	Unit of measurement	DG1 600x600

Dimensions

L/H	L1/H1	B	B1
654	606	54	16

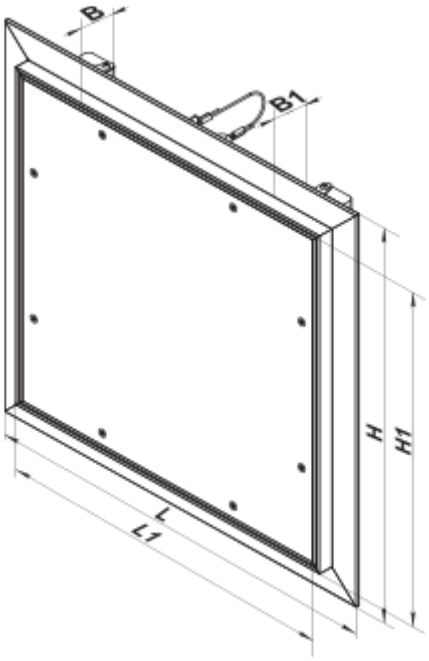
B
B1
H
H1
L
L1