DG1 200x200

Metal access doors with a plasterboard plate for bathrooms



	Unit of measurement	DG1 200x200

Dimensions

L/H	L1/H1	B	B1
254	206	54	16

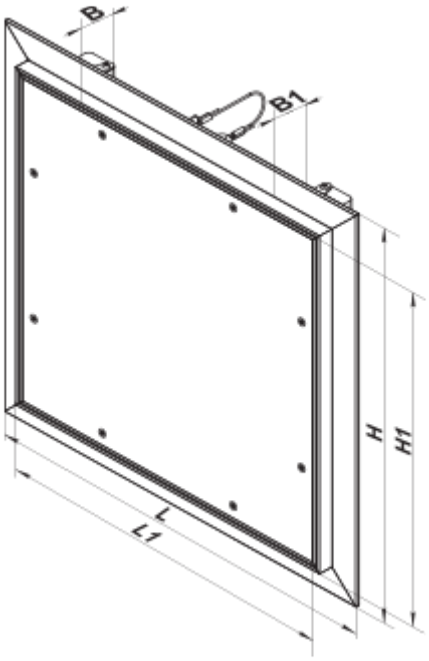
B
B1
H
H1
L
L1