DG 300x300

Metal access doors for installation in plasterboard structures for bathrooms



	Unit of measurement	DG 300x300

Dimensions

H/B	H1/B1	B2	L	L1
360	296	304	15	55

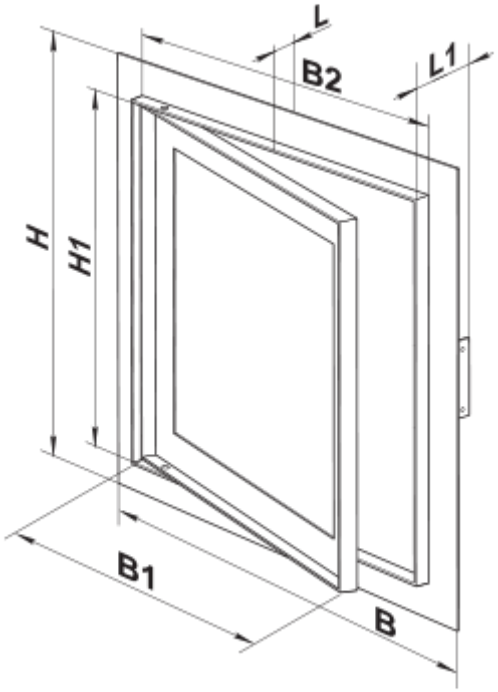
L
B2
L1
H
H1
B1
B