CZ 315



The quick-release clamp is designed for quick and reliable connection of spigots and round-section ventilation system elements

- Casing material: Galvanized steel

	Unit of measurement	CZ 315
Connected air duct size	mm	315
Weight	kg	0.65

Dimensions

ØD	H
315	380

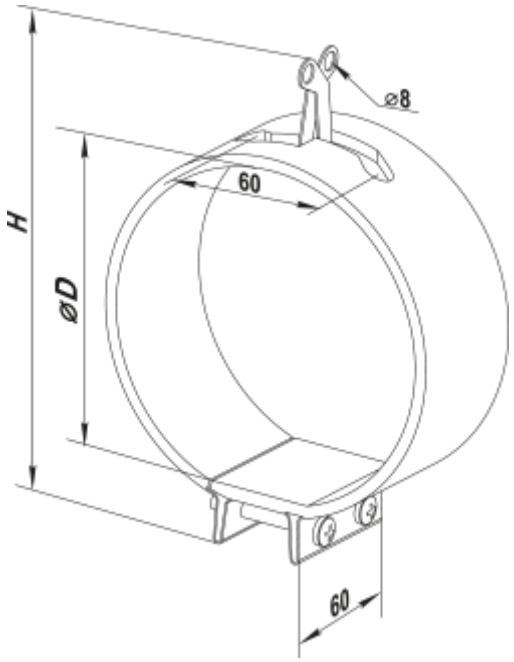
⌀8
60
H
⌀D
60