CBF 300 Light TP



Ceiling-mounted centrifugal high-resistance fans for extract ventilation with a built-in light source

- Sound pressure level LpA at 3 m: 31
- Lighting
- Control: Built-in control panel
- Casing material: Galvanized steel
- Backdraft protection: Backdraft damper
- Motion sensor
- Timer: Turn off timer

	Unit of measurement	CBF 300 Light TP	
Connected air duct size	mm	150	
Phases	-	1	
Maximum supply voltage	V	240	
Minimum supply voltage	V	220	
Power supply frequency	Hz	50/60	
Rated power	W	31	49
Unit current	A	0.15	0.22
Maximum airflow	m³/h	220	300
Sound pressure level LpA at 3 m	dB(A)	28	31
Weight	kg	5.1	
Ambient air temperature min	°C	1	
Ambient air temperature max	°C	40	
Ingress protection rating	-	IPX2	
Impeller material	-	Plastic	

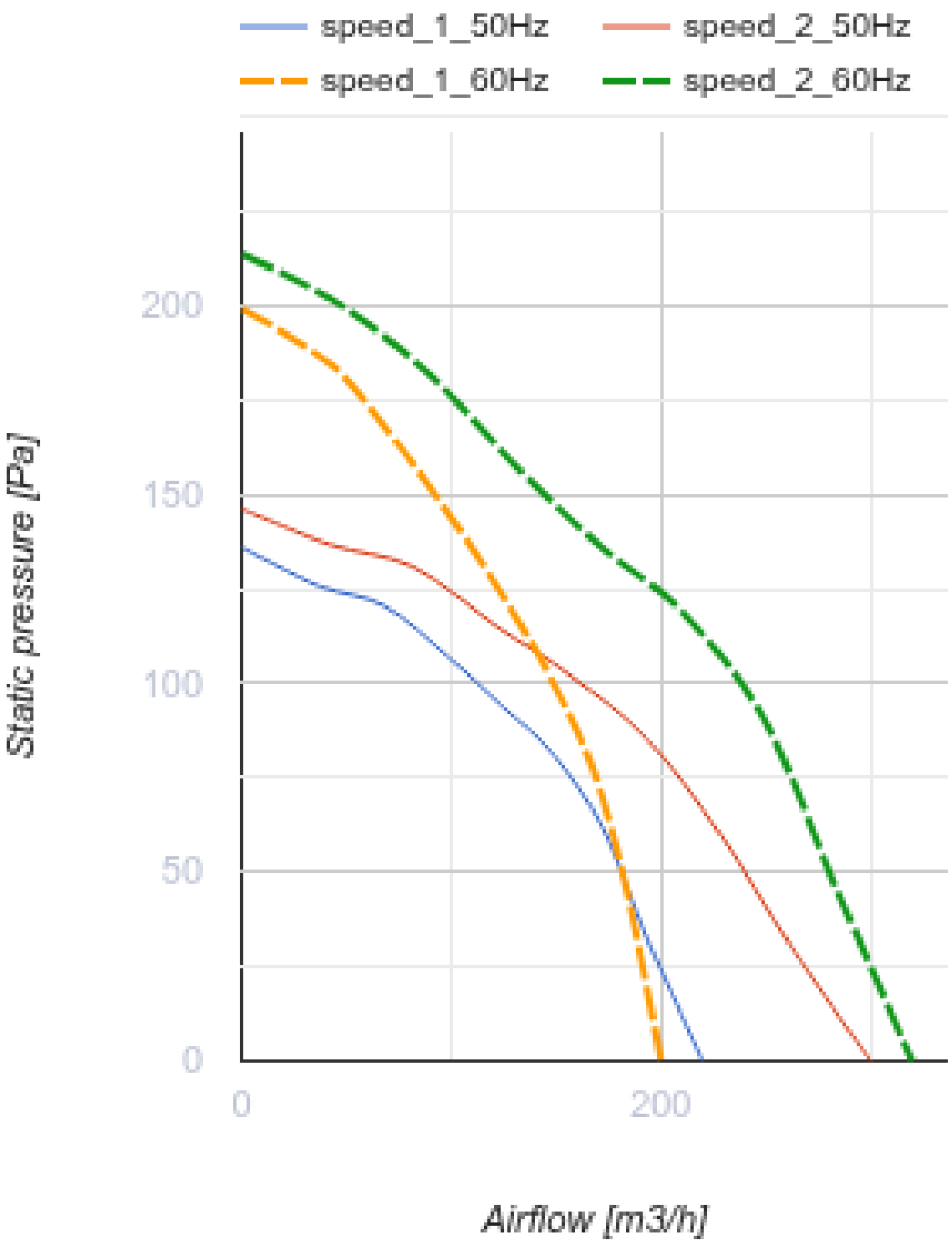
speed_1_50Hz
speed_2_50Hz
speed_1_60Hz
speed_2_60Hz
Static pressure [Pa]
200
150
100
50
0
0
200
Airflow [m3/h]

Dimensions

D	L1	A	B	C	E	H	h	a	b
149	50	330	258	260	395	188	62	208	123

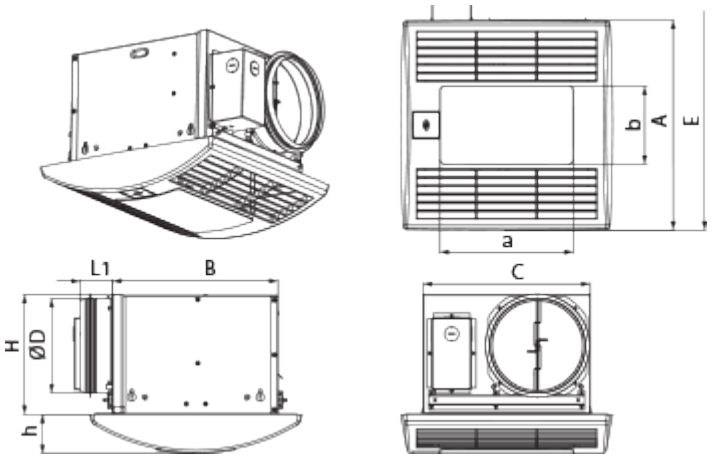

Accessories

Speed control switches

Name	Photo	Description
P2-10		Turning fan on/off and speed switching for multispeed fans

Metal

Name	Photo	Description
MVM 152 bVs N		Supply and exhaust metal hoods

Flexible ducts

Name	Photo	Description
Polyvent 660		Flexible uninsulated air duct made of 65 micron PVC film

Other accessories

Name	Photo	Description
MV 152 V ASA		Supply and exhaust hoods
TP CBF		Motion sensor

CH-PLC-10WG23		10 W LED light with colour temperature 3000 K

Fittings

Name	Photo	Description
CB 60-165		The clamps are designed for quick and reliable mounting and connection of various round ventilation system components. Clamps are the stainless steel quick-release clamps equipped with a stainless steel swing screw

Ecodesign

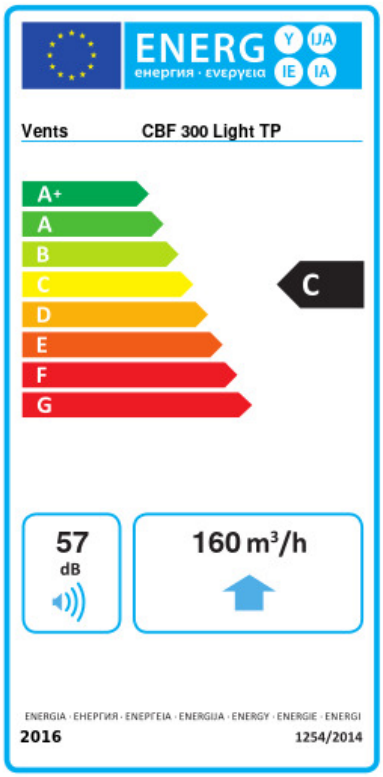

Trademark	Vents					
Model	CBF 300 Light TP					
Specific energy consumption (SEC) (kWh/(m²/a))	Cold		Average		Warm	
	-52.5	A+	-25.4	C	-9.9	F
Type of ventilation unit	Unidirectional					
Type of drive installed	2-speed					
Type of heat recovery system	None					
Maximum flow rate (m³/h)	160					
Electric power input (W)	44					
Reference flow rate (m³/s)	0.044					
Reference pressure difference (Pa)	50					
Specific power input (SPI) (W/(m³/h))	0.156					
Control typology	Local demand control					
Maximum external leakage rates (%)	2.7					
Declared typology	RVU UVU					
Sound power level (dB(A))	57					
The annual electricity consumption (AEC) (kWh/a)	Cold		Average		Warm	
	116		116		116	
The annual heating saved (AHS) (kWh/a)	Cold		Average		Warm	
	5536		2830		1280	