CBF 150 DC Light TP

Ceiling-mounted centrifugal fans for extract ventilation equipped with a DC motor and built-in light source



- Sound pressure level LpA at 3 m: 29
- Lighting
- Control: Built-in control panel
- Casing material: Galvanized steel
- Backdraft protection: Backdraft damper
- Motion sensor
- Timer: Turn off timer

	Unit of measurement	CBF 150 DC Light TP
Connected air duct size	mm	150
Phases	-	1
Maximum supply voltage	V	240
Minimum supply voltage	V	120
Power supply frequency	Hz	50/60
Rated power	W	26
Unit current	A	0.24
Maximum airflow	m^3/h	254
Sound pressure level LpA at 3 m	dB(A)	29
Weight	kg	6.2
Ambient air temperature min	°C	1
Ambient air temperature max	°C	40
Ingress protection rating	-	IPX2
Impeller material	-	Plastic

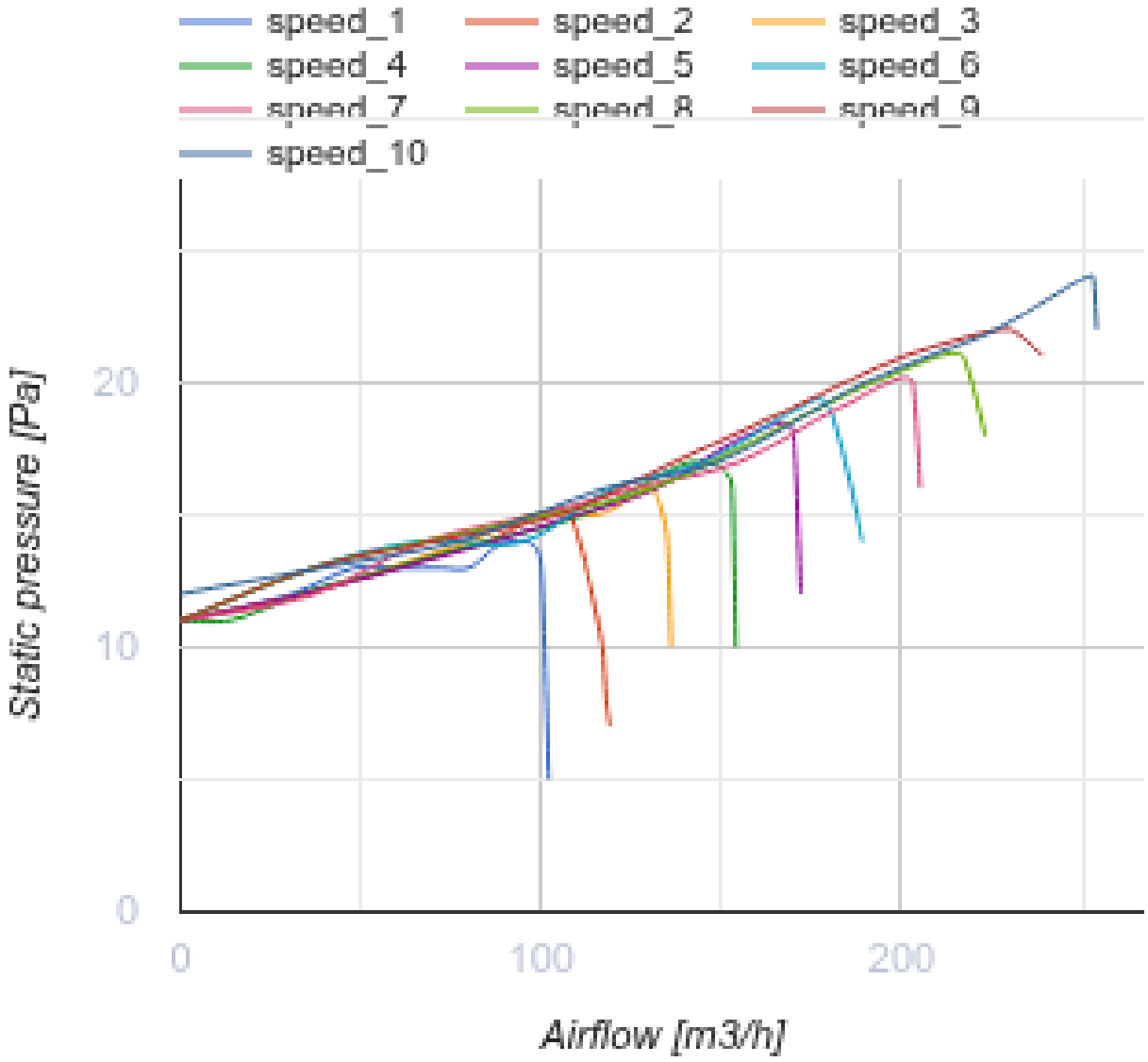

Dimensions

D	L1	A	B	C	E	H	h	a	b
149	50	330	258	260	395	188	62	208	123

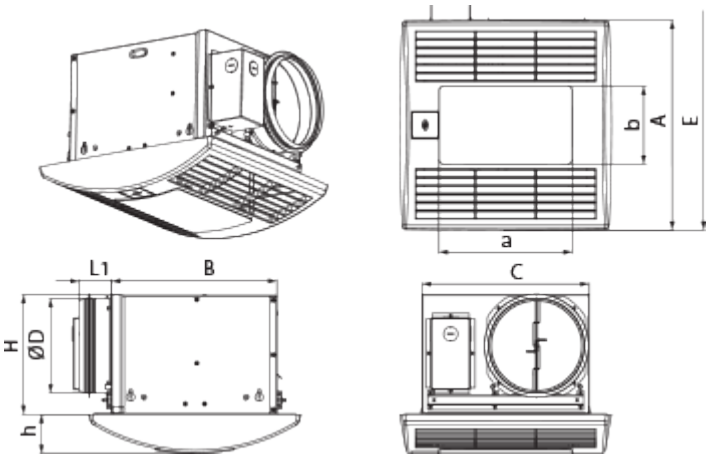

Accessories

Speed control switches

Name	Photo	Description
P2-10		Turning fan on/off and speed switching for multispeed fans

Metal

Name	Photo	Description
MVM 152 bVs N		Supply and exhaust metal hoods

Flexible ducts

Name	Photo	Description
Polyvent 660		Flexible uninsulated air duct made of 65 micron PVC film

Other accessories

Name	Photo	Description
MV 152 V ASA		Supply and exhaust hoods
TP CBF		Motion sensor
CH-PLC-10WG23		10 W LED light with colour temperature 3000 K

Fittings

Name	Photo	Description
CB 60-165		The clamps are designed for quick and reliable mounting and connection of various round ventilation system components. Clamps are the stainless steel quick-release clamps equipped with a stainless steel swing screw

Ecodesign

Trademark	Vents					
Model	CBF 150 DC Light TP					
Specific energy consumption (SEC) (kWh/(m²/a))	Cold		Average		Warm	
	-54	A+	-27	B	-11.5	E
Type of ventilation unit	Unidirectional					
Type of drive installed	Variable speed					
Type of heat recovery system	None					
Maximum flow rate (m³/h)	100					
Electric power input (W)	14					
Reference flow rate (m³/s)	0.044					
Reference pressure difference (Pa)	50					
Specific power input (SPI) (W/(m³/h))	0.1					
Control typology	Local demand control					
Maximum external leakage rates (%)	2.7					
Declared typology	RVU UVU					
Sound power level (dB(A))	53					
The annual electricity consumption (AEC) (kWh/a)	Cold		Average		Warm	
	53		53		53	
The annual heating saved (AHS) (kWh/a)	Cold		Average		Warm	
	5536		2830		1280	