Casto 150 TH L



Quiet axial extract fans

- Sound pressure level LpA at 3 m: 35
- Impeller type: Mixed-flow
- Casing material: Plastic
- Backdraft protection: Backdraft damper
- Humidity sensor
- Timer: Turn off timer

	Unit of measurement	Casto 150 TH L
Maximum supply voltage	V	240
Minimum supply voltage	V	220
Power supply frequency	Hz	50
Rated power	W	28
Unit current	A	0.21
Maximum airflow	m^3/h	255
Sound pressure level LpA at 3 m	dB(A)	35
Weight	kg	0.97
Ambient air temperature min	°C	1
Ambient air temperature max	°C	40
Ingress protection rating	-	IP44
Impeller material	-	Plastic

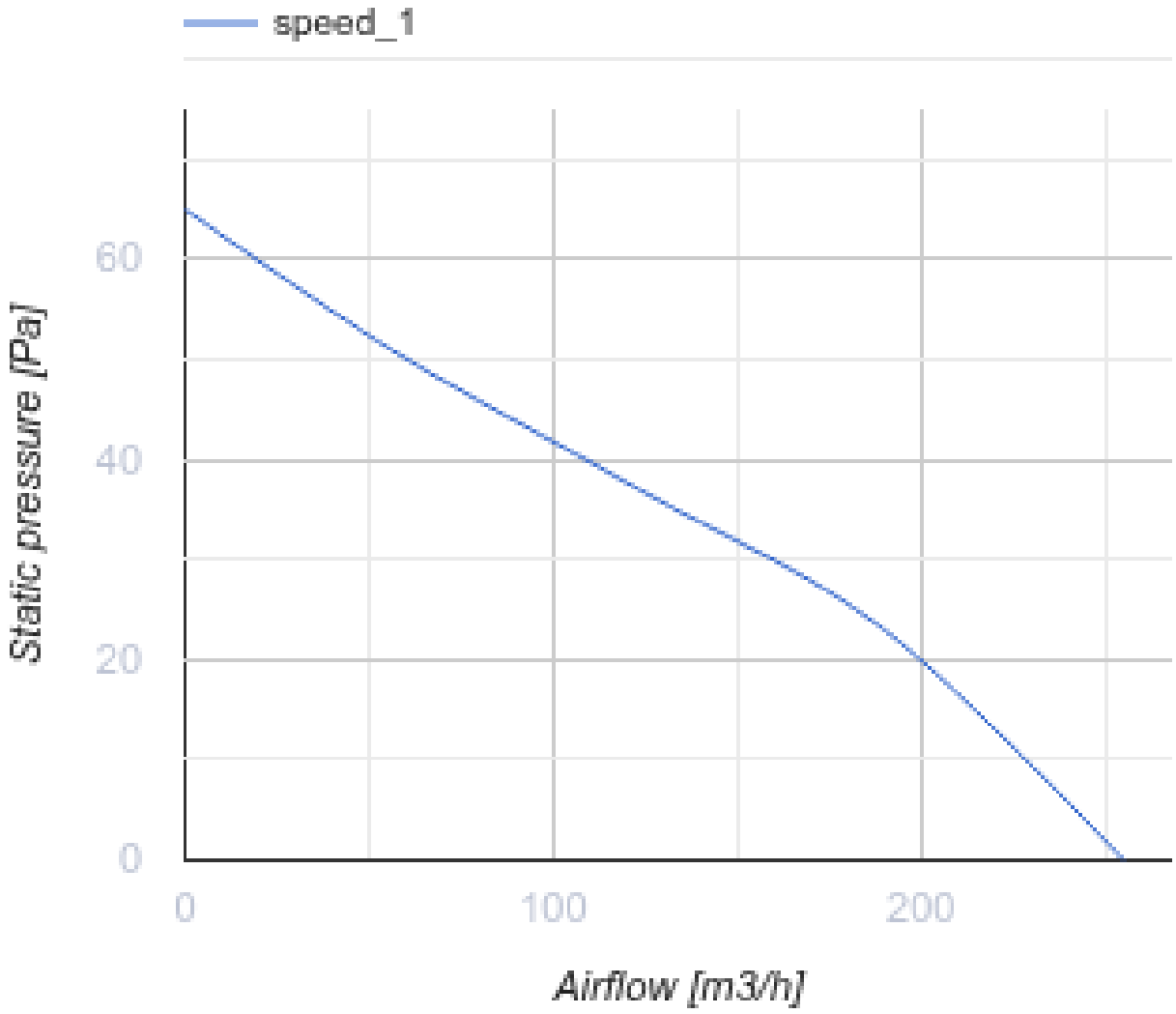

Dimensions

D	B	L	L1
148	206	112	23

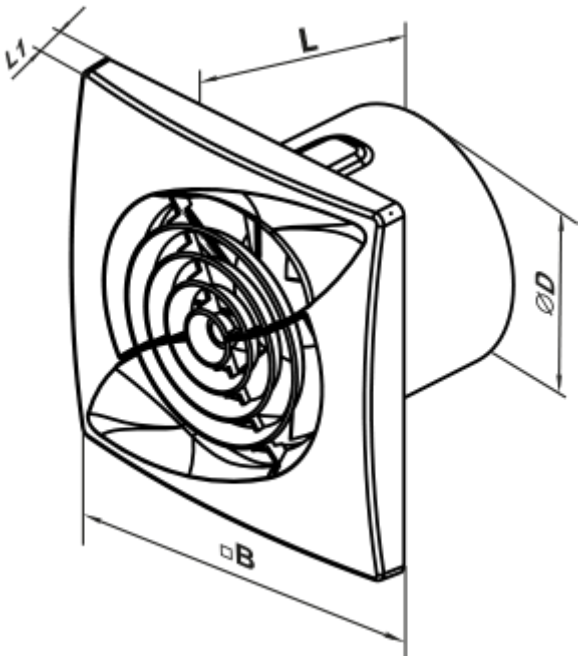

Accessories

Plastic

Name	Photo	Description
MV 150 V		Two-piece plastic grilles with angled louvers, round flange

Fittings

Name	Photo	Description
PVT 050/10		The adhesive PVC tape is an insulation tape made of plasticized PVC base covered with a glue layer
PVT 050/30		The adhesive PVC tape is an insulation tape made of plasticized PVC base covered with a glue layer
PVT 050/50		The adhesive PVC tape is an insulation tape made of plasticized PVC base covered with a glue layer
C 150		The clamps are designed for quick and reliable mounting and connection of various round ventilation system components. Clamps are made of stainless steel band

Flat duct

Name	Photo	Description

3805		Wall mounting

Flexible ducts

Name	Photo	Description
Polyvent N		Flexible uninsulated air duct made of metallized film

Backdraft dampers

Name	Photo	Description
KO 150		Back valve is designed for domestic fan

Window vents

Name	Photo	Description
PO 400		Window ventilators for supply ventilation

Plastic

Name	Photo	Description
MV 152 VK		Supply and exhaust hoods

Metal

Name	Photo	Description
MVM 152 V N		Exhaust metal hoods